ORDERS FOR REGULATION OF OUTDOOR LIGHTING IN THE UNINCORPORATED AREAS OF FORT BEND COUNTY, TEXAS

FORT BEND COUNTY ENGINEERING
Mailing: 301 Jackson Richmond, Texas 77469
Physical: 1124 Blume Road Rosenberg, Texas 77471
Phone (281) 633-7501
Web site: www.FortBendCountyTx.gov

ADOPTED - March 23, 2004
Amendment No. 1 - April 25, 2005
Amendment No. 2 - February 7, 2006
Amendment No. 3 - June 13, 2006
Amendment No. 4 - August 29,2006

[6] TABLE OF CONTENTS

SECTION I	Definitions
SECTION II	Grandfathering of Existing Outdoor Lighting
SECTION III	Exemptions, Amendments, and Variances
SECTION IV	New Lighting: Shielding and Aiming Requirements
SECTION V	New Lighting: Illumination Level Requirements
SECTION VI	New Lighting: General Requirements
SECTION VII	Enforcement
SECTION VIII	Penalties For Violation
SECTION IX	Validity and Severability
SECTION X	Exhibits
SECTION XI	Effective Date

[6] Table of contents and cover page was added by Commissioner Court on June 13, 2006.

ORDERS FOR REGULATION OF OUTDOOR LIGHTING IN THE UNINCORPORATED AREAS OF FORT BEND COUNTY, TEXAS

I.
DEFINITIONS

1.1 In these orders:

a) "Conforming" shall mean the luminaire does meet the requirements for new outdoor lighting as set forth in this ordinance.

b) "Externally illuminated sign or billboard" is any sign or billboard that is lit by a light source external to the sign.

c) "Footcandle" (abbreviated fc) is a unit of measure for illuminance. A one-candela uniform point source of light will illuminate a surface that is everywhere one foot from the point source at one footcandle, which is also equal to one lumen per square foot. Illuminance at an arbitrary distance from a lamp is measured in footcandles by a light meter approved for the given lamp type.

d) "Full Cutoff" (FCO) describes a luminaire light distribution where 100 candela per 1000 lamp lumens (10%) may emit at all vertical angles beginning at 80 degrees up from nadir to less than 90 degrees, and zero candela per 1000 lamp lumens (0%) is allowed at 90 degrees (horizontal plane) and all angles above. This applies to all horizontal angles around the luminaire. A full cutoff luminaire is also fully shielded.

e) "Fully shielded" shall mean a lighting fixture constructed in such a manner that all light emitted by the fixture, either directly from the lamp or a diffusing element, or indirectly by reflection or refraction from any part of the luminaire, is projected below the horizontal plane as determined by photometric test or certified by the manufacturer. A fully shielded fixture is not necessarily full cutoff.

f) "George Observatory" means the public astronomical facility located in Brazos Bend State Park, Fort Bend County, Texas at longitude W95° 35.62' and latitude N29° 22.5'.

g) "Horizontal Illuminance" is the measure of a light source's illuminance measured in footcandles by a light meter at ground level with its light sensor surface oriented horizontally.

h) "Illuminance" is the amount of light falling on a surface and is measured in footcandles.

i) "IESNA" (or "IES") is an acronym for the professional society: Illuminating Engineering Society of North America. The IESNA makes recommendations for outdoor lighting, but does not set outdoor lighting community standards, which are set through local ordinances.

j) "Installed" shall mean the initial installation or replacement of outdoor lighting as defined herein made subsequent to the enactment of these orders.

k) "Internally Illuminated Sign" is a sign with an internal light source where the message area is luminous.

l) "Lamp" is a source of light more commonly known as a bulb.

m) "Light Power Density" for a lit sign or billboard is the connected load of the illumination sources divided by the area of the sign, expressed in Watts/ft^2. A signboard with a message on both front and back has twice the area of a sign facing in one direction.

n)[5] "Lighting Zones" are intended to prevent over or under lighting relative to ambient lighting conditions. Three default lighting zones are defined with increasing ambient light corresponding to geographic descriptions: LZ1 – area adjacent to Brazos Bend State Park and George Observatory as shown on Exhibit 6; LZ2 – the area designated as a buffer zone for the area around LZ1. LZ2 begins at the edge of LZ1 to the County line on the southwest and is bounded on the north by the latitude N29°33' until that line intersects to the northwest a one-half mile distance from US Highway 59's centerline. Then the boundary line will follow the one-half mile distance from US Highway 59's centerline to the western County line. LZ3 - the northern part of the County, from the boundary line
[10] of LZ2 to the northern County line.

o) "Local Street" shall mean any 2-lane street used primarily for direct access to residential, commercial, industrial, or other abutting property. Local streets make up a large percentage of the total street system, but carry a small proportion of vehicular traffic.

p) "Lumen" (abbreviated lm) is a unit of luminous flux. One footcandle is one lumen per square foot. For the purposes of this regulation, the lumen-output values shall be the initial lumen output ratings of a lamp. The lumen rating associated with a given lamp is generally indicated on its packaging or may be obtained from the manufacturer.

q) "Luminaire" is a complete lighting unit consisting of a lamp or lamps, together with any reflectors, refractors, diffusers, baffles, lenses, or other devices to distribute the light, and with parts to position and protect the lamp and to connect the lamps to the power supply. Also known as a light fixture.

r) "Maintained illuminance" means that ground illumination will not fall below this minimum level as the lamp or lamps age.

s) "Nadir" is the direction pointing vertically down from the lowest light emitting part of the luminaire (see Exhibit 3 for an example).

t) "Night" shall mean the period of time between 30 minutes after sunset to 30 minutes before sunrise.

u) "Nonconforming" shall mean the luminaire does not meet the requirements for new outdoor lighting as set forth in this ordinance.

v) "Open sky" means any direction above the horizontal plane that is not blocked by obstacles such as trees, buildings, houses, flags, etc.

w) "Outdoor lighting" means any type of lighting, fixed or movable, designed or used for outdoor illumination of building or homes, including lighting for billboards, streetlights, searchlights used for advertising purposes, externally or internally illuminated on or off-site advertising signs, and area-type lighting. It does not include lighting equipment,

[5] Definition of "Lighting Zones" was revised, and removal of "Rural Areas" and "Urban areas" was amended by Commissioners Court on June 13, 2006.
[10] Definition of "Lighting Zones" was revised to chg. 4 lighting zones to 3 &to delete the last sentence. It was amended by Commissioners Court on August 29, 2006.

required by law to be installed on motor vehicles or lighting required for the safe take-off and landing of aircraft. Nor does it include lighting used for road construction or emergency purposes.

x) "Outdoor recreation facilities" shall mean an open-air arena, stadium, playing field or similar facility primarily used to host sporting events and that is open to the general public and includes an area for spectators.

y) "Panel sign" means an internally illuminated sign built in a regular shape, with a continuous translucent message panel.

z) "Partially shielded" shall mean that those fixtures shall be shielded in such a manner that the bottom edge of the shield is below the plane centerline of the light source (lamp), minimizing light above the horizontal plane.

aa) "Regulated area" shall mean all territory within Fort Bend County that is unincorporated.

bb) "Semi-cutoff" (SCO) describes a luminaire light distribution where the candela per 1000 lamp lumens does not numerically exceed 50 (5%) at or above an angle of 90 degrees above nadir, and 200 (20%) at or above a vertical angle of 80 degrees above nadir. This applies to all horizontal angles around the luminaire.

cc) "Sign area" is the illuminated area of the sign expressed in square feet. The area of a panel sign includes all the area of the message panel. The area of a multifaceted sign is calculated perpendicular to each face or planar surface.

dd) "Uniformity ratio" shall mean the ratio of the average illumination to minimum illumination for the designated lighted area. For example, a 4:1 uniformity ratio means that the lowest level of illumination should be no less than 25% (or 4 times less) of the average level of illumination for the area. Light uniformity is important to night vision since the eye can adapt quickly to only a narrow range of illumination at any one time.

ee) "Veiling luminance" (also known as disability glare) is a luminance produced by bright sources in the field-of-view superimposed on the image in the eye reducing contrast and hence visibility. The "veiling luminance ratio" in the IES method uses the maximum value of Veiling Luminance divided by the Average Pavement Luminance as a measure of the disability glare produced by a lighting system.

ff) "Vertical Illuminance" is the measure of a light source's illuminance in footcandles by a light meter with its light sensor surface oriented vertically at five feet above the ground and facing the light source.

II.
GRANDFATHERING OF EXISTING OUTDOOR LIGHTING

2.1 All outdoor lighting existing and in place prior to the effective date of this light ordinance are grandfathered.

2.2 Except for lamp replacement only, no grandfathered luminaire may be repaired and/or modified to perpetuate its existence unless the repair and/or modification maintains conformance or makes the grandfathered luminaire conforming. If a lamp is available that makes a grandfathered

luminaire conform, or progress towards conformance, to the ordinance's required illuminance level, then such a lamp must be utilized when the lamp is replaced.

2.3 A luminaire replacing or supplementing a grandfathered luminaire must conform to the requirements for new outdoor lighting as stated in this ordinance.

2.4 Grandfathered spotlights and floodlights, with a total luminous flux greater than 1800 lumens, elevated above the ground on poles or buildings and used for area lighting must be adjusted so that their axis of illumination is at an angle not greater than 20 degrees measured from the vertical line between the fixture and the ground (see Exhibits 1 and 2). This subsection applies only to spotlights and floodlights with adjustable mounts and does not apply to outdoor recreational facilities.

2.5 Outdoor Recreational Facilities: No outdoor recreational facility shall be illuminated by nonconforming means from 11 PM local time to sunrise except to conclude a specific recreational activity already in progress.

2.6 Outdoor Display Lighting: Display lighting using nonconforming grandfathered outdoor luminaires with metal halide bulbs must not be used for security lighting after 11 PM local time to sunrise (or after closing hours if before 11 PM local time to sunrise).

2.7 An owner of a grandfathered luminaire may replace or modify the luminaire so that it conforms to this light ordinance if requested by the George Observatory staff or a designated county official. However, the replacement or modification of the luminaire must be provided at no cost to the owner including materials and labor. For example, a grandfathered mercury-vapor outdoor light may be retrofitted with a light shield to make it fully shielded.

III.
EXEMPTIONS, AMENDMENTS, AND VARIANCES

3.1 This ordinance shall not apply to the following:

a) Decorative holiday lighting from November 15 through the next January 15;
b) Lighting required by law to be installed on surface vehicles and aircraft;
c) Airport lighting required by law;
d) Publicly-owned traffic signs, or emergency information signs;
e) Signs for historic landmarks, where signage is using historic lighting technology;
f) Temporary emergency lighting;
g) Temporary lighting other than security lighting at construction projects.

3.2 Amendments to this ordinance may be made by Commissioners Court through normal public process, with an opportunity for public comment and review, before adopting the amendments. Amendments may be made in response to changes in local conditions, and/or changes that occur in the lighting recommendations of nationally recognized organizations such as the IESNA.

3.3 Any individual may submit a written request to the County Judge or designated official for a temporary exemption from the requirements of these orders: The request for the exemption shall contain as a minimum the following information:

a) Proposed use of outdoor light involved.
b) Type of lamp to be used, including manufacturer's part number.

c) Type of light fixture used, including manufacturer's model number and specification (cut) sheets indicating photometric distribution data stated in isofootcandle diagrams.
d) Initial lumens of lamp or lamps.
e) Proposed location of outdoor light.
f) Starting and ending dates for temporary exemption.
g) Contact information including name of requester, affiliation (if applicable), address and telephone number.

3.4 Lighting zone LZ1 designated for the Brazos Bend State Park shall be extended to areas outside of the state park as depicted in Exhibit 6 in Section 10 of this ordinance. The extended area is bounded by latitude N29° 26' on the north side and longitude W95° 44' on the west, and by the Fort Bend/Brazoria county line to the east and south.

3.5 [1] a) Master Planned Developments with plats and sections of development approved by Commissioners Court prior to the March 23, 2004 adoption of the initial Regulations may install non-conforming post-top ornamental luminaires within the Master Planned Development. However, the installer of the non-conforming luminaires must utilize post-top ornamental luminaires in the developer's selected style and daytime appearance that produce the least amount of fixture uplight above the horizontal plane. All non-conforming post-top ornamental luminaries must be approved by Fort Bend County Engineering Department.

[11]

b) Conforming post-top ornamental luminaires may be repaired. Non-conforming post-top ornamental luminaires may have minor components, such as, but not limited to, lamp, starter kit, and photo eye replaced or repaired. Additionally, non-conforming post-top ornamental luminaires may have major components such as, but not limited to, ballasts, capacitors, and refractors/globes replaced or repaired, provided that the optics are first upgraded to any available optics that will result in the least amount of fixture uplight above the horizontal plane while maintaining the style and daytime appearance of the luminaire.

IV.
NEW LIGHTING: SHIELDING AND AIMING REQUIREMENTS

4.1 The following applies to outdoor luminaires utilizing any lamp type with a total luminous flux less than or equal to 1800 lumens:

a) Shielding not required but highly recommended.
b) Luminaires for area lighting that produce focussed light beams (such as, but not restricted to, floodlights and spotlights) must be aimed so that no part of the manufacture's stated angular beam width radiates directly into the open sky above the horizontal plane.
c) Luminaires for landscape, architectural, or flag lighting must utilize a focussed light beam and be aimed at the intended target so as to minimize stray light radiating directly into the open sky.

4.2 The following applies to outdoor luminaires with a total luminous flux greater than 1800 lumens:

a) Except for landscape lighting, architectural lighting and flag illumination, an outdoor luminaire with a total luminous flux greater than 1800 lumens must be shielded according to lamp type as set forth in the following table:

[1] Section 3.5 added to Ordinance by Amendment approved by Commissioners Court on April 26, 2005.
[11] Section 3.5 a) The entire paragraph was replaced by Amendment approved by Commissioners Court on August 29, 2006.

SHIELDING REQUIREMENTS FOR LUMINAIRES WITH A TOTAL LUMINOUS FLUX GREATER THAN 1800 LUMENS

LAMP TYPE	SHIELDING
Low Pressure Sodium	Fully
Mercury Vapor	Fully
High Pressure Sodium	Fully
Fluorescent	Fully
Metal Halide	Fully
Halogen (Quartz)	Fully
Induction	Fully
Xenon	Fully
Incandescent	Fully
Fossil Fuel	Partially
Glass Tubes Filled With Neon, Argon, or Krypton	Partially
Other Sources	As Approved By The Authority Assigned by Commissioners Court

b) Outdoor luminaires with lamps requiring full shielding according to Subsection 4.2 Paragraph (a) must be aimed so as to prevent direct radiation of light into the open sky at any angle above the horizontal plane. Lamps requiring partial shielding according to Subsection 4.2 Paragraph (a) must be aimed so as to minimize direct radiation of light into the open sky at any angle above the horizontal plane.

c)[12] Architectural and landscape illumination: Luminaires must be shielded so as to illuminate only the intended target, which if not possible, then the lighting is restricted to illuminating the intended target such that no stray light passes above the horizontal plane. All architectural and landscape illumination, excluding those used in a residential homes, shall be turned off or reduced to minimum security levels between 11:00 pm local time to sunrise by the use of automatic timing equipment.

d) Flag illumination: Luminaires must be shielded so that light illuminates only the area about the flag pole in which the flag flies and at the illumination level specified in Subsection 5.6.

e) Externally illuminated signs and billboards can use a maximum of two luminaires per board that are mounted with the refractor face down and fully shielded according to IESNA standards. All luminaires will use a borosilicate prismatic glass that will direct the light to only illuminate the intended bulletin or poster face.

f) Spotlights and floodlights elevated above the ground on poles or buildings and used for area lighting must be adjusted so that their axis of illumination is at an angle not greater than 20 degrees measured from the vertical line between the fixture and the ground. This does not apply to outdoor recreational facilities addressed in Subsection 6.8. (Reference Section 10, Exhibits 1 and 2.)

g)[13] All standard streetlights must utilize full cutoff optics (FCO) type luminaires that are installed level to the ground in two intersecting perpendicular planes (see Exhibit 4),

[12] Section 4.2 c) sentence 2 was added by amendment approved by Commissioners Court on August 29, 2006.
[13] Section 4.2 g) was revised by amendment approved by Commissioners Court on August 29, 2006.

should be horizontally level in all directions. Local street lighting must conform to the illuminance level in Subsection 5.2. Refer to Section 4.2 (g) for ornamental street lighting.

New ornamental street lights must be classified as either IES "Full Cutoff' or IES "Cutoff" as determined by a valid photometric report. Furthermore, ornamental street lights shall be used that conform to the following total zonal fixture uplight for Zone 90-180 degrees (also known as the hemisphere above the horizontal plane) varying by Lighting Zone:

LZl : 0.0% total zonal fixture uplight (IES Full Cutoff Only)
LZ2: 0.5% or less total zonal fixture uplight (IES Full Cutoff or Cutoff)
LZ3: 2.0% or less total zonal fixture uplight (IES Full Cutoff or Cutoff)

A valid photometric report must be generated for the specified model by a qualified testing lab (testing to IES standards) and must include a full vertical evaluation up through 180 degrees, otherwise that fixture shall be considered to emit 100% zonal fixture uplight. All fixtures without lab-generated photometric reports available shall be considered to emit 100% zonal fixture uplight.

h) Outdoor sales and gas station canopies must utilize canopy lights that are fully recessed into the canopy or are fully shielded by the canopy.

V.

NEW LIGHTING: ILLUMINATION LEVEL REQUIREMENTS

5.1 [2] The following maintained illuminance levels shall not exceed the following values for parking lots and parking areas.
[14]

Parking Areas

Lighting Zone	Average Maintained Illuminance	Max. /Min. Ratio	Avg. /Min. Ratio
LZ1	1.5 fc	12.5:1	7.5:1
LZ2	2.0 fc	16.5:1	10.0:1
LZ3	3.0 fc	10.0:1	6.0:1

Entrance Drives at Parking Areas (if applicable)

Lighting Zone	Average Maintained Illuminance	Max. /Min. Ratio	Avg. /Min. Ratio
LZ1	0.5 fc	10:1	4.0:1
LZ2	1.0 fc	10:1	4.0:1
LZ3	1.5 fc	10:1	4.0:1

Note: Exhibit 5 provides an example of locations where maximum and minimum spot illuminances may occur for a regular grid of luminaires as found in a parking lot or area.

[2] Section 5.1 was amended by Commissioners Court on February 7, 2006.
[14] Section 5.1 was amended by Commissioners Court on August 29, 2006.

a) The average illuminance values shall be calculated on a 10 ft. x 10 ft. grid.
b) Landscape areas and other un-paved areas shall not be included in the calculations.
c) If a separate entrance or circulation drive is included, a separate calculation shall be provided.
d) Facilities with multiple parking areas should be separated into zones with a separate calculation for each zone.
e) All calculations will be done using only the light contribution from the parking lot lights.
f) Light trespass will be limited to a maximum of 0.5 horizontal fc at grade at a distance of 20 feet beyond the property lines.

5.2 [3] Local Street lighting:

a) Local streets are not required to have streetlights. However, this subsection regulates the illumination levels for streetlights that are installed on any local street.

b) Local street light illumination must follow the guidelines in paragraph (d) of this subsection unless a licensed professional engineer trained and experienced in the science of illumination engineering deems other illumination levels more appropriate for existing conditions.

c) The streetlights must conform to the shielding requirements in Subsection 4.2, paragraph (g).

d) The average maintained illuminance and average/minimum uniformity ratio for roadway lighting of local streets shall be used in conjunction with a veiling luminance ratio of no greater than 0.4 and shall not exceed the levels in the following table:

[15]

Lighting Zone	Ambient Light	Pedestrian Conflict	Avg. Maintained Illuminance		Uniformity Ratio Average/Minimum
			Portland Cement Concrete Road	Asphalt Road	
LZ1	DARK	LOW	0.2 fc	0.3 fc	6.0:1
LZ2	LOW	LOW	0.3 fc	0.4 fc	6.0:1
LZ3	MEDIUM	MEDIUM	0.5 fc	0.7 fc	6.0:1

5.3 Service stations and other fueling facilities:

a) Except for identification signs such as logos, lighting at service stations shall not be used with the intent of attracting customers.
b) The following average maintained illuminance levels for service stations must not be exceeded:

Service Station Component	Lighting Zones: LZ1, LZ2	Lighting Zones: LZ3 [16]
Approach	1.5 fc	2.0 fc
Driveway	1.5 fc	2.0 fc
Pump Island	5.0 fc	10.0 fc
Building Facade	2.0 fc	3.0 fc
Service Areas	2.0 fc	3.0 fc
Landscape Highlights	1.0 fc	2.0 fc

[3] Section 5.2 was amended by Commissioners Court on February 7, 2006.
[15] Section 5.2 table was amended to remove LZ4 by Commissioners Court on August 29, 2006.
[16] Section 5.3 table was amended to remove LZ4 by Commissioners Court on August 29, 2006.

c) Pump island canopy lights must meet the shielding requirements of Subsection 4.2, Paragraph (h), as well as the illumination level cited for "pump island" in Subsection 5.3, Paragraph (b). A uniformity ratio (average maintained illuminance to minimum maintained illuminance) of no greater that 8:1 is recommended beneath the canopy.

d) Floodlights and spotlights must follow the aiming requirements established in Section 4.

e) Advertising signs must meet the shielding criteria in Section 4 and Subsection 5.5.

5.4 [17] Permanent outdoor merchandise sales and storage lots utilizing night lighting. *

a) Sales lots must not exceed the following average maintained illumination levels:

	Lighting Zone: LZ1		**Lighting Zone: LZ2**		**Lighting Zones: LZ3**	
Sales and Storage Lot Component	Average Maintained Illumination Level	Maximum/ Minimum Ratio	Average Maintained Illumination Level	Maximum/ Minimum Ratio	Average Maintained Illumination Level	Maximum/ Minimum Ratio
Front Merchandise display along public right of ways	3.0 fc	5.0:1	5.0 fc	5.0:1	10 fc	5.0:1
Other display areas and entrances	2.0 fc	10:1	2.5 fc	10:1	5.0 fc	10:1
Entrance drives	0.5 fc	10:1	1.0 fc	10:1	1.5 fc	10:1

* Note: After closing hours, light levels shall be reduced to minimum-security levels. (*Refer to 6.10*)

b) Lots in lighting zone LZ1 must not be constructed from Portland cement due to its high reflectance unless approved by Commissioners Court. The recommended construction material for lots in LZ1 is bituminous concrete, better known as asphalt, to minimize reflected light from the lot surface.

5.5 [19] Outdoor Lighting of Signs and Billboards:

a) Externally illuminated signs and billboards will follow the luminaire and shielding requirements specified in Subsection 4.2, Paragraph (e). The lamp and ballast watts will not exceed the following lighting power densities in Watts/ft^2 of board face:

Lighting Zone: LZ1	**Lighting Zone: LZ2**	**Lighting Zone: LZ3**
1.2 W/ ft^2	1.4 W/ ft^2	2.0 W/ ft^2

b) Internally illuminated panel signs must not exceed a lighting power density of 11.5 Watts/ft^2 when covered by a colored lexon or by a plastic type material. Time restrictions on internally illuminated panel signs are stated in Subsection 6.4.

5.6 A flag flying at night will be considered properly illuminated as long as flag is minimally visible.

[17] Section 5.4 was amended by Commissioners Court on August 29, 2006.

[19] Section 5.5 table was amended to remove LZ4 by Commissioners Court on August 29, 2006.

VI.
NEW LIGHTING: GENERAL REQUIREMENTS

6.1 Street Lighting: A proposed subdivision or any new street light installation, including any new street lighting installation by existing subdivisions, shall utilize only full cutoff optics (FCO) street lighting in accordance with the standards set in Sections 4 and 5. On projects where an engineer or architect is required, the developer, lighting engineer or architect shall verify in writing to the designated county representative that all street lighting was installed in accordance with this ordinance.

6.2 Parking Lot Lighting: The installation of parking lot lighting must conform to the shielding and maximum illuminance levels in Sections 4 and 5.

6.3 All mercury vapor luminaires with a total luminous flux greater than 1800 lumens must be fully shielded.

6.4 Internally illuminated panel signs with translucent letters and symbols on an opaque background have no operational time restrictions, but should be strongly considered as unnecessary lighting under Subsection 6.10. Internally illuminated panel signs with dark letters and symbols on a white background fall under the category of unnecessary lighting in Subsection 6.10.

6.5 Searchlights, lasers, or any similar high-intensity light are not permitted, except in emergencies where temporary lighting is needed by police, emergency medical technicians, and fire personnel; or for meteorological data gathering purposes.

6.6 Tower and Structure Lighting: Unless otherwise required by the FCC or FAA, tower or other structures requiring obstruction lighting at night shall be of the minimum luminous intensity oscillating red in color.

6.7 All light fixtures, except traffic signals, shall be located, aimed or shielded so as to minimize visible glare and stray light trespassing across property boundaries where the luminaire(s) are installed.

6.8 New Recreational Facilities: Illumination for new outdoor recreation facilities must conform to the requirements of Section 4 except when such shielding would interfere with the intended activity. For such facilities, partially-shielded luminaires are permitted as a substitute for full shielding. Examples of activities where partially-shielded luminaires are permitted as a substitute include, but are not limited to, baseball, softball, football and rodeo arenas. Specifically, tennis, volleyball, racquetball and handball courts and swimming pools must utilize fully-shielded luminaires if required under Section 4. All light fixtures must also conform to the requirements of Subsection 6.7 regarding light trespass.

6.9 [18] New Commercial Construction Projects: New construction projects shall include **an Outdoor Lighting Plan that indicates point to point isofootcandle illuminance values to 20 feet beyond the property lines of the site under development.** The County will use the Outdoor Lighting Plan to predetermine conformance to this ordinance. The following information shall be included in the Outdoor Lighting Plan:

a) Proposed use of outdoor light involved.
b) Type of lamp to be used, including manufacturer's part number.

[18] Section 6.9 and 6.9 n) were amended by Commissioners Court on August 29, 2006.

c) Type of light fixture used, including manufacturer's model number and specification (cut) sheets indicating photometric distribution data stated in isofootcandle diagrams.
d) Initial lumens of lamp or lamps and associated maximum light loss factor.
e) Proposed location of outdoor light.
f) Maximum illuminance.
g) Minimum illuminance.
h) Average maintained illuminance for the task area.
i) Uniformity Ratio (average illuminance divided by minimum illuminance). Areas outside of the task area shall not be factored into the uniformity ratio calculation.
j) Illuminance levels at the property line.
k) Aiming and shielding instructions (details) for floodlighting or spotlighting.
l) Luminaire and lamp schedule including total initial lumen output for each fixture.
m) Contact information including name of requester, affiliation (if applicable), address and telephone number.
n) If applicable, include details on the automatic timing sequence used for this site.

6.10 [4] After closing hours, businesses shall reduce outdoor lighting between the hours of 11:00 p.m. and sunrise by turning off any unnecessary lights. Examples of necessary outdoor lighting include lighting associated with flag display, safety, and security. Any business which is open twenty-four (24) hours a day shall comply with the lighting levels set out in Section 5.1 of these Regulations at all times when it is open for business.

VII.
ENFORCEMENT

7.1 A law enforcement officer or any other designated official representing Fort Bend County shall make enforcement of these orders.

7.2 The County shall attach a copy of this ordinance to the plat application and instructions. The applicant shall return a signed copy of the ordinance with the plat application.

VIII.
PENALTIES FOR VIOLATION

8.1 An individual, or business, in violation of this ordinance shall be notified by official written correspondence from the appropriate office of the County. Fines may be assessed against the individual if the lighting violation is not brought into compliance within 90 days. Each day the lighting violation(s) is/are not brought into compliance after the 90 day period has expired, may constitute another offense subject to additional fines.

8.2 Any Commercial Developer or Residential Area Developer found in violation shall be ordered to cease further lighting development until lighting violations are brought into compliance within 90 days. Fines may be assessed against the Commercial Developer, Installation Contractor, or Residential Area Developer if the lighting violations are not brought into compliance within the 90 days.

8.3 Any lighting engineer, lighting designer or consultant, lighting installer, or lighting utility company found in violation of this ordinance, or found contributing to a violation of this ordinance through contractual work, shall be ordered to cease further lighting installations on all projects within Fort Bend County until the lighting violations are brought into compliance with this Ordinance.

[4] Section 6.10 was amended by Commissioners Court on February 7, 2006.

8.4 Any outdoor lighting found in violation that is not brought into compliance with all stipulations of this Ordinance by the owner, contractor, or developer within 120 days after the initial notice of a violation is distributed by the County Official, the County may, at its discretion:

a) Suspend the business activities within the County of the developer or contractor until all luminaires on the property found to be in violation are brought into compliance with this Ordinance.

8.5 The County may not approve any further plat(s), permit(s) or plan(s) for any subdivision that installs new street lighting that does not meet the street lighting standards in Sections 4 and 5.

IX.
VALIDITY AND SEVERABILITY

9.1 Where any provisions of the Texas State Statutes, any federal law, or any companion ordinance conflicts with the requirements of this outdoor light control provision, the more restrictive law or regulation shall govern.

9.2 Validity: If any section, subsection, paragraph, sentence, clause, phrase or provision of these Regulations shall for any reason be held to be invalid or unconstitutional by a decree or decision of any court of competent jurisdiction, such decree or decision shall not affect nor impair the validity of any other section or remaining portion of these Regulations.

9.3 Severability: If any section, subsection, paragraph, sentence, clause, phrase or provision of these Regulations shall for any reason be held to be invalid or unconstitutional, as applied to a particular application or part of an application, by decree or decision of a court of competent jurisdiction, such decree or decision shall be limited to the particular application or part of an application and the general applicability of these Regulations to other applications or part of applications shall not be affected.

X.
EXHIBITS

Exhibit 1

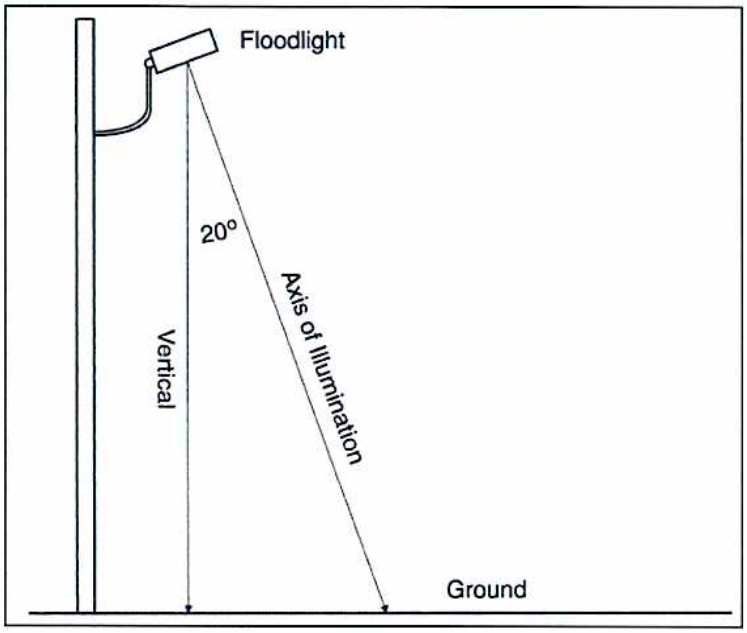

Exhibit 1. See Subsection 4.2 (g) – For spotlights and floodlights mounted overhead and used for area lighting, the axis of illumination shall be adjusted to an angle not more than 20 degrees from the vertical line between the fixture and the ground.

Exhibit 2

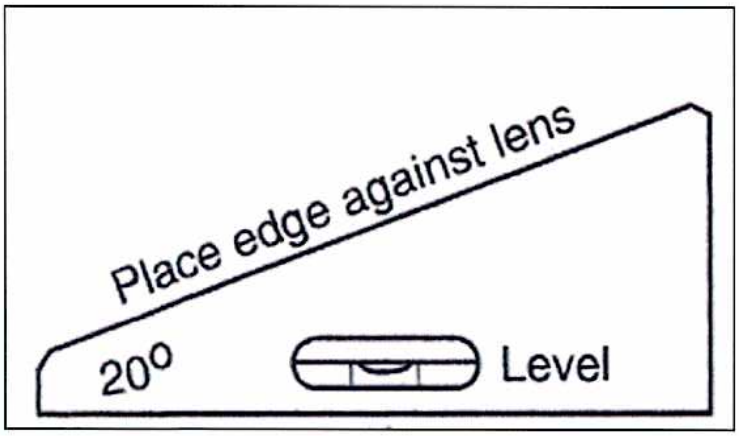

Exhibit 2. A tool for aiming lights as in Exhibit 1, above. Place the upper edge of the tool against the lense and adjust the fixture so that a level parallel to the bottom edge shows level.

Exhibit 3

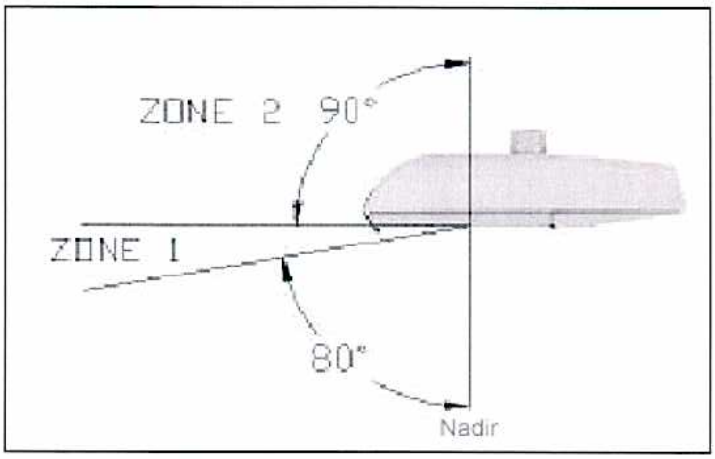

Exhibit 3. Full Cutoff (FCO) luminaire in Subsection 4.2 (g). The FCO luminaire in Zone 1 (beginning at 80 degrees up from nadir to less than 90 degrees) may emit up to 100 candela per 1000 lamp lumens (10%) at all vertical angles. The FCO luminaire in Zone 2 (beginning at 90 degrees up from the nadir (horizontal plane) and all angles above) must emit zero candela per 1000 lamp lumens (0%). This applies to all horizontal angles around the luminaire.

Exhibit 4

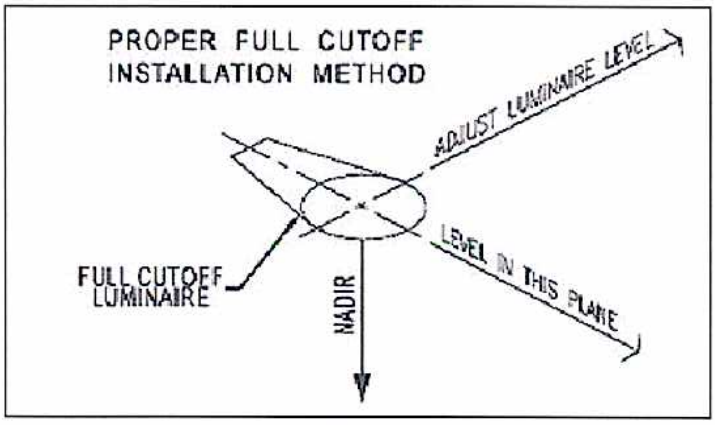

Exhibit 4. The FCO luminaire must be adjusted so that it is horizontally level in two perpendicular directions, each of which is perpendicular to the direction of the luminaire's nadir.

Exhibit 5

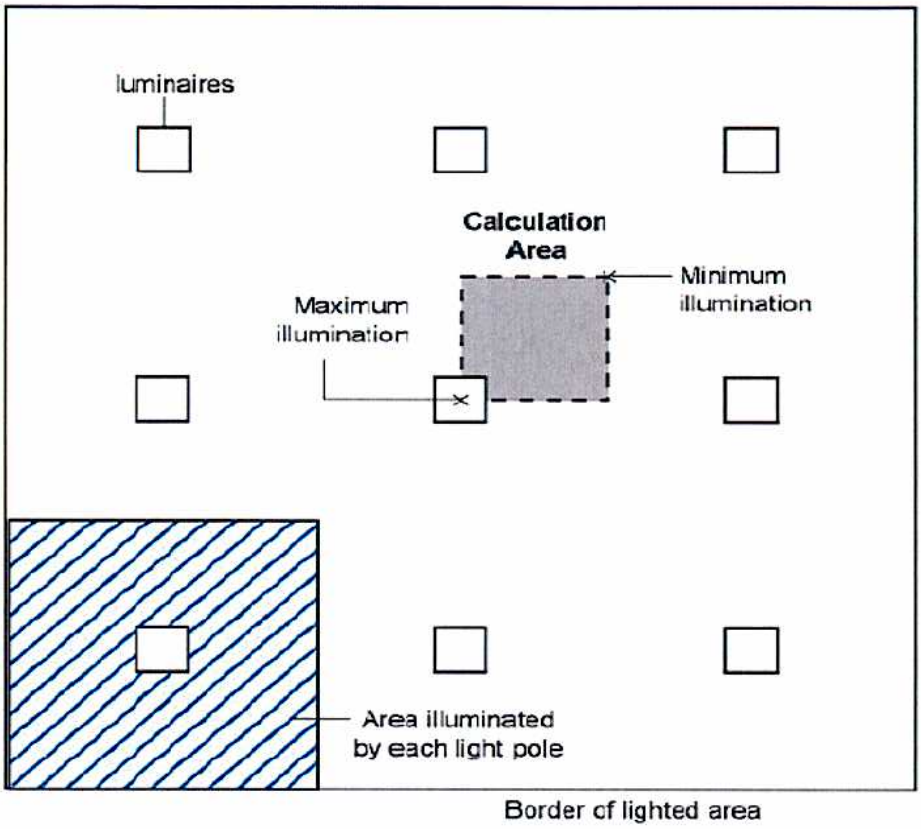

Exhibit 5. Map view of parking lot or parking area indicating luminaire positions, area illuminated by each pole, and points with respect to luminaires where maximum and minimum illumination values occur. From California Energy Efficiency Standards 2005 study on parking lot lighting.

Exhibit 6

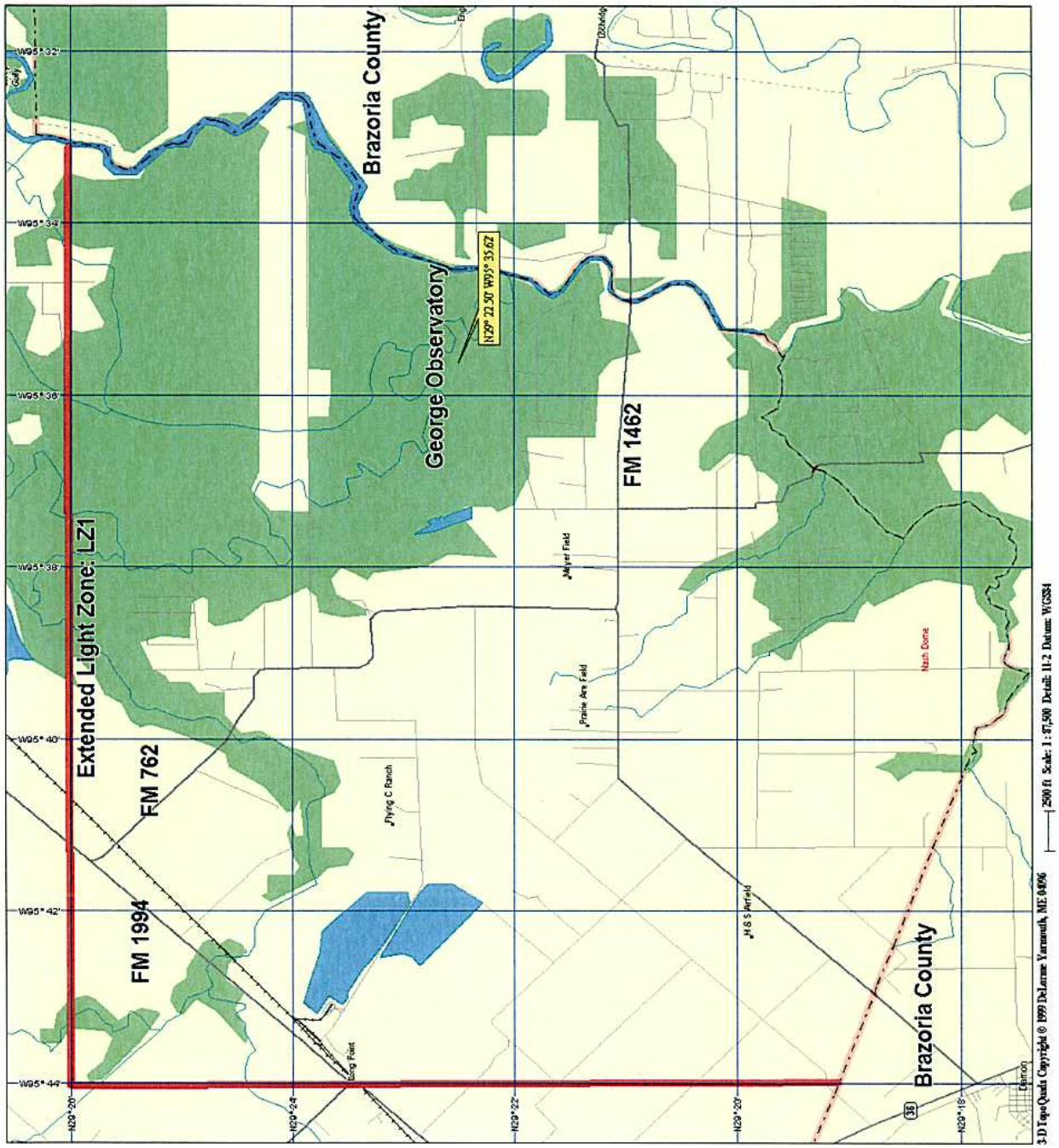

Exhibit 6. Extension of the Brazos Bend State Park lighting zone LZ1 to an area outside of the state park. The extended area is bounded by latitude N29° 26' on the north side and longitude W95° 44' on the west (shown in red), and by the Fort Bend County/Brazoria County line to the east and south.

[7] Exhibit 7

FORT BEND COUNTY LIGHTING ORDINANCE: HOW TO DETERMINE YOUR LIGHT ZONE

1) With your net browser, type the address: http://www.fortbendcountytx.gov
2) From header options select "Quick Links".
3) Select "Engineering" from the drop down menu.
4) Select "Engineering Requirements" on the left column.
5) [8] Click on "Outdoor Lighting Zone Map" to view the Lighting Zones in PDF format.

XI. EFFECTIVE DATE

The effective date of this ordinance shall be March 23, 2004 .
The effective date of Amendment No. 1 shall be April 26, 2005 .
The effective date of Amendment No. 2 shall be February 7, 2006 .
The effective date of Amendment No. 3 shall be June 13, 2006 .
The effective date of Amendment No. 4 shall be August 29, 2006.

[9]

Approved this 29th day of August, 2006.

[7] Exhibit 7 changed to reflect accessing the Outdoor Lighting Zone Map web-site as amended by Commissioners Court on June 13, 2006.
[8] The Outdoor Lighting Zone Map was amended by Commissioners Court on June 13, 2006.
[9] ~~All other conditions paragraph added as amended by Commissioners Court on June 13, 2006.~~ Removed paragraph 8/29/2006.