Fort Bend County, Texas
Invitation for Bid

Construction of Right Turn Lane for West Bellfort at SH 99 for Fort Bend County Mobility Bond Project No. 20403
BID 22-064

SUBMIT BIDS TO:

Fort Bend County
Purchasing Department
Travis Annex
301 Jackson, Suite 201
Richmond, TX 77469

Note: All correspondence must include the term "Purchasing Department" in address to assist in proper delivery

SUBMIT NO LATER THAN:

Tuesday, April 19, 2022
2:00 PM (Central)

LABEL ENVELOPE:

BID 22-064
West Bellfort at SH 99

ALL BIDS MUST BE RECEIVED IN AND TIME/DATE STAMPED BY THE PURCHASING OFFICE OF FORT BEND COUNTY ON OR BEFORE THE SPECIFIED TIME/DATE STATED ABOVE.

BIDS RECEIVED AS REQUIRED WILL THEN BE OPENED AND PUBLICLY READ.

BIDS RECEIVED AFTER THE SPECIFIED TIME, WILL BE RETURNED UNOPENED.

Results will not be given by phone.
Results will be provided to bidder in writing after Commissioners Court award.

Requests for information must be in writing and directed to:
Brooke Lindemann
Senior Buyer
Brooke.Lindemann@fortbendcountytx.gov

Vendor Responsibilities:

- Download and complete any addendums. (Addendums will be posted on the Fort Bend County website no Later than 48 hours prior to bid opening)
- Submit response in accordance with requirements stated on the cover of this document.
- DO NOT submit responses via email or fax.

Prepared: 03/21/2022
Issued: 03/27/2022

COUNTY PURCHASING AGENT
Fort Bend County, Texas

Vendor Information

Jaime Kovar
Purchasing Agent

Office (281) 341-8640

Legal Company Name (top line of W9)			
Business Name (if different from legal name)			
Federal ID # or S.S. #		DUNS #	
Type of Business	___ Corporation/LLC ___ Partnership ___ Sole Proprietor/Individual ___ Tax Exempt Organization		Age in Business?
Publicly Traded Business	___ No ___ Yes Ticker Symbol _____		
Remittance Address			
City/State/Zip			
Physical Address			
City/State/Zip			
Phone/Fax Number	Phone: _____ Fax: _____		
Contact Person			
E-mail			
Check all that apply to the company listed above and provide certification number.	DBE-Disadvantaged Business Enterprise ☐ SBE-Small Business Enterprise ☐ HUB-Texas Historically Underutilized Business ☐ WBE-Women's Business Enterprise ☐	**Certification #** _____ **Certification #** _____ **Certification #** _____ **Certification #** _____	Cert Date _____ _____ _____ _____ / Exp Date _____ _____ _____ _____
Company's gross annual receipts	<$500,000 _____	$500,000-$4,999,999 _____	
	$5,000,000-$16,999,999 ___	$17,000,000-$22,399,999 _____	
	>$22,400,000 _____		
NAICs codes (Please enter all that apply)			
Signature of Authorized Representative			
Printed Name			
Title			
Date			

THIS FORM MUST BE SUBMITTED WITH THE SOLICITATION RESPONSE

1.0 GENERAL REQUIREMENTS:

1.1 Read this entire document carefully. Follow all instructions. You are responsible for fulfilling all requirements and specifications. Be sure you understand them.

1.2 General Requirements apply to all advertised bids; however, these may be superseded, whole or in part, by the scope, special requirements, specifications, special specifications or other data contained herein.

1.3 Governing Law: Bidder is advised that these requirements shall be fully governed by the laws of the State of Texas and that Fort Bend County may request and rely on advice, decisions and opinions of the Attorney General of Texas and the County Attorney concerning any portion of these requirements.

1.4 Bid Form Completion: Fill out, sign, and return to the Fort Bend County Purchasing Department one (1) complete bid form. An authorized representative of the bidder must sign the Contract Sheet. The Contract will be binding only when signed by the County Judge, Fort Bend County and a purchase order authorizing the item(s) desired has been issued. The use of corrective fluid is not acceptable and may result in the disqualification of bid. If an error is made, the bidder must draw a line through error and initial each change.

1.5 Bid Returns: Bidders must return all completed bids to the Fort Bend County Purchasing Department at 301 Jackson, Suite 201 Richmond Texas no later than 2:00 P.M. on the date specified. Late bids will not be accepted. Bids must be submitted in a sealed envelope, addressed as follows: Fort Bend County Purchasing Agent, Travis Annex, 301 Jackson, Suite 201 Richmond, Texas 77469.

1.6 Addenda: No interpretation of the meaning of the drawings, specifications or other bid documents will be made to any bidder orally. All requests for such interpretations must be made in writing addressed to Brooke Lindemann, Senior Buyer, 301, Jackson, Suite 201, Richmond, Texas, 77469, E-mail: Brooke.Lindemann@fortbendcountytx.gov. Any and all interpretations and any supplemental instructions will be in the form of written addenda to the contract documents which will be posted on Fort Bend County's website. Addenda will **ONLY** be issued by the Fort Bend County Purchasing Agent. It is the sole responsibility of each bidder to insure receipt of any and all addenda. All addenda issued will become part of the contract documents. Bidders must sign and include it in the returned bid package. Deadline for submission of questions and/or clarification is no later than **Tuesday, April 12, 2022 at 10:00AM (central)** Requests received after the deadline will not be responded to due to the time constraints of this bid process.

1.7 References: All bidders must submit, **WITH BID**, at least three (3) references from clients for whom a project similar to that specified herein has been

Initials of Bidder: _____

successfully accomplished. References must include clients name, contact person and telephone number.

1.8 Bid Bond: All bidders must submit, **WITH BID**, a cashier's check or certified check for at least five percent (5%) of the total bid price, payable to the order of Fort Bend County, or a Bid Bond in the same amount issued by a surety, acceptable to Fort Bend County, authorized to do business in the State of Texas, as a guarantee that the Bidder will do the work described herein at the rates stated herein. Unsuccessful bidder's Cashier's Check or Certified Check will be returned only after a written request to do so have been received in the Office of the Fort Bend County Purchasing Agent.

1.9 Material Safety Data Sheets: Under the "Hazardous Communication Act", commonly known as the "Texas Right to Know Act", a bidder must provide to Fort Bend County and using departments, with each delivery, material safety data sheets, which are, applicable to hazardous substances defined in the Act. Bidders are obligated to maintain a current, updated file in the Fort Bend County Purchasing Department. Failure of the bidder to maintain such a file will be cause to reject any bid applying thereto.

1.10 Pricing: Prices for all goods and/or services shall be firm for the duration of this Contract and shall be stated on the bid sheet. Prices shall be all inclusive. No price changes, additions, or subsequent qualifications will be honored during the course of the Contract. All prices must be written in ink or typewritten. If there are any additional charges of any kind, other than those mentioned above, specified or unspecified, bidder MUST indicate the items required and attendant costs or forfeit the right to payment for such items.

1.11 Term Contracts: If the Contract is intended to cover a specific time period, said time will be given in the specifications under scope.

1.12 Recycled Materials: Fort Bend County encourages the use of products made of recycled materials and shall give preference in purchasing to products made of recycled materials if the products meet applicable specifications as to quantity and quality. Fort Bend County will be the sole judge in determining product preference application.

1.13 Evaluation: Evaluation shall be used as a determinant as to which bid items or services are the most efficient and/or most economical for Fort Bend County. It shall be based on all factors which have a bearing on price and performance of the items in the user environment. All bids are subject to tabulation by the Fort Bend County Purchasing Department and recommendation to Fort Bend County Commissioners Court. Compliance with all bid requirements, delivery and needs of the using department are considerations in evaluating bids. Pricing is NOT the only criteria for making a recommendation. The Fort Bend County Purchasing Department reserves the right to contact any bidder, at any time, to clarify, verify or request information with regard to any bid.

Initials of Bidder: _____

1.14 Disqualification of Bidder: Upon signing this bid document, a bidder offering to sell supplies, materials, services, or equipment to Fort Bend County certifies that the bidder has not violated the antitrust laws of this state codified in section 15.01, et seq., Business & Commerce Code, or the federal antitrust laws, and has not communicated directly or indirectly the bid made to any competitor or any other person engaged in such line of business. Any or all bids may be rejected if Fort Bend County believes that collusion exists among the bidders. Bids in which the prices are obviously unbalanced may be rejected. If multiple bids are submitted by a bidder and after the bids are opened, one of the bids is withdrawn, the result will be that all of the bids submitted by that bidder will be withdrawn; however, nothing herein prohibits a vendor from submitting multiple bids for different products or services.

1.15 Awards: Fort Bend County reserves the right to award this Contract on the basis of lowest and best bid in accordance with the laws of the State of Texas, to waive any formality or irregularity, to make awards to more than one bidder, to reject any or all bids. In the event the lowest dollar bidder meeting specifications is not awarded a contract, the bidder may appear before the Commissioners Court and present evidence concerning its responsibility.

1.16 Contract Obligation: Fort Bend County Commissioners Court must award the Contract and the County Judge or other person authorized by the Fort Bend County Commissioners Court must sign the Contract before it becomes binding on Fort Bend County or the bidders. Department heads are not authorized to sign agreements for Fort Bend County. Binding agreements shall remain in effect until all products and/or services covered by this purchase have been satisfactorily delivered and accepted.

2.0 SCOPE:

It is the intent of Fort Bend County to contract with one (1) vendor for all materials, supplies, equipment, tools, services, labor and supervision necessary to complete the Construction of Right Turn Lane for West Bellfort at SH 99, hereinafter referred to as the "Project," as specified herein.

3.0 PRE-BID CONFERENCE:

A pre-bid conference will be conducted on **Tuesday, April 5, 2022 at 9:00 AM** (CST). The pre-bid conference will be held at the Fort Bend County Purchasing Department located in the Travis Annex at 301 Jackson, Suite 201, Richmond, Texas 77469. All bidders are encouraged to attend.

4.0 LIQUIDATED DAMAGES:

The County and the Contractor recognize the delays, expense, and difficulties involved in proving in a legal or arbitration proceeding the actual loss suffered by the County if the work is not complete on time. Accordingly, instead of requiring any such proof, the County and the Contractor agree that as liquidated damages for delay (but not as a penalty) the Contractor shall

Initials of Bidder: _____

pay the County $1,500.00 for each day that expires after the time specified herein for completion until the Work is complete, unless contract time has been adjusted by extension of time approved by Commissioner's Court.

The Contractor will be placed on one (1) year probation if liquidated damages are accrued. During the probation period, if the Contractor accrues liquidated damages on another project, they will be disqualified from being awarded any County work for two (2) years.

5.0 COMPLETION TIME & PAYMENT:

5.1 Fort Bend County shall pay the Contractor in current funds for the Contractor's performance of the Contract the contract sum, as stated herein, after receipt of notice to proceed and a purchase order issued by the Fort Bend County Purchasing Agent.

5.2 Based upon Applications for payment submitted to the County Auditor, Fort Bend County shall make progress payments on account of the contract sum to the Contractor as provided below and elsewhere in the contract documents.

5.2.1 The period covered by each application for payment shall be one calendar month ending on the last day of the month.

5.2.2 Provided an application for payment is received by the County Auditor not later than the 15th day of a month, Fort Bend County shall make payment to the Contractor not later than the 15th day of the next month. If an application for payment is received by the County Auditor after the application deadline fixed above, payment shall be made by Fort Bend County not later than 30 days after the County Auditor receives the application for payment.

5.2.3 Application for payment shall indicate the percentage of completion of each portion of the Project as of the end of the period covered by the application for payment.

5.2.4 Subject to the provisions of the contract documents, the amount of each progress payment shall be computed as follows:

5.2.4.1 Take that portion of the contract sum properly allocable to completed Project less retainage of ten percent (10%).

5.2.4.2 Add that portion of the contract sum properly allocable to materials and equipment delivered and suitably stored at the site for subsequent incorporation in the completed construction (or, if approved by Fort Bend County, suitably stored off the site at a location agreed upon in writing), less retainage of ten percent (10%).

Initials of Bidder: _____

5.2.4.3 Subtract the aggregate of previous payments made by Fort Bend County.

5.2.4.4 The progress payment amount as determined in above shall be further modified under the following circumstances:

Add, upon substantial completion of the Project, a sum sufficient to increase the total payments to one hundred percent (100%) of the contract sum, less such amounts as Fort Bend County shall determine for incomplete work and unsettled claims.

5.2.4.5 Final payment, constituting the entire unpaid balance of the contract sum, shall be made by Fort Bend County to the Contractor when the Contract has been fully performed by the Contractor.

5.3 Before the first application for payment, the Contractor shall submit to the Facilities Management and Planning Department a schedule of values allocated to various portions of the work, prepared in such form and supported by such data to substantiate its accuracy as the Facilities Management and Planning Department may require. This schedule, unless objected to by the Facilities Management and Planning Department shall be used as a basis for reviewing the Contractor's application for payment.

5.4 Contractor must provide with each application for payment a contractor's affidavit certifying bills against the Contractor for labor, material and expendable equipment employed in the performance of Contractor have been paid in full prior to acceptance of final payment from Fort Bend County.

5.5 The Contractor will permit Fort Bend County, or any duly authorized agent of Fort Bend County, to inspect and examine the books and records of the Contractor for the purpose of verifying the amount of work performed under the Contract. Fort Bend County's right to inspect survives the termination of the Contract for a period of five years.

6.0 LIMIT OF APPROPRIATION:

Prior to the execution of this Contract, Contractor has been advised by County, and Contractor clearly understands and agrees, such understanding and agreement being of the absolute essence to this Contract, that County shall have available only those funds specifically allocated in this Contract to fully discharge any and all liabilities which may be incurred by County in bringing this Project to an absolute conclusion, resulting in a complete, fully furnished, fully equipped and fully usable facility, and that the total of any and all basic construction costs, costs of providing the required services and materials, all fees and compensation of any sort to the Contractor, and any and all costs for any and all things or purposes coming inuring under or out of this Contract, irrespective of the nature thereof, shall not exceed said specifically allocated sum, notwithstanding any word, statement or thing contained in or inferred from the preceding

provision of this Contract which might in any light by any person be interpreted to the contrary.

7.0 RIGHT TO ASSURANCE:

Whenever Fort Bend County in good faith has reason to question the Contractor's intent to perform, Fort Bend County may demand that the Contractor give written assurance of its intent to perform. In the event that a demand is made and no assurance is given within five (5) days, Fort Bend County may treat this failure as an anticipatory repudiation of the Contract.

8.0 PERFORMANCE & PAYMENT BONDS:

Performance and Payment Bonds: In the event the total accepted bid price exceeds $25,000 the Contractor must provide to the Office of the County Purchasing Agent, a performance bond and a payment bond, each in the amount of 100% of the total contract sum within ten (10) calendar days after receipt of notification of bid award. Such bonds shall be executed by a corporate surety duly authorized and admitted to do business in the State of Texas and licensed in the State of Texas to issue surety bonds with a Best Rating of "A" or better. Fort Bend County reserves the right to accept or reject any surety company proposed by the Contractor. In the event Fort Bend County rejects, the proposed surety company, the Contractor will be afforded five (5) additional days to submit the required bonds issued by a surety company acceptable to Fort Bend County.

9.0 POWER OF ATTORNEY:

An attorney-in-fact who signs a bid bond, performance bond or payment bond must file with each bond a certified and effectively dated copy of his or her power of attorney.

10.0 INSURANCE:

10.1 All respondents shall submit, with response, a current certificate of insurance indicating coverage in the amounts stated below. In lieu of submitting a certificate of insurance, respondents may submit, with response, a notarized statement from an Insurance company, authorized to conduct business in the State of Texas, and acceptable to Fort Bend County, guaranteeing the issuance of an insurance policy, with the coverage stated below, to the firm named therein, if successful, upon award of this Contract.

10.2 At contract execution, contractor shall furnish County with properly executed certificates of insurance which shall evidence all insurance required and provide that such insurance shall not be canceled, except on 30 days prior written notice to County. Contractor shall provide certified copies of insurance endorsements and/or policies if requested by County. Contractor shall maintain such insurance coverage from the time Services commence until Services are completed and provide replacement certificates, policies and/or endorsements for any such insurance expiring prior to completion of Services. Contractor shall obtain such insurance written on an Occurrence form (or a Claims Made form for Professional

Initials of Bidder: _____

Liability insurance) from such companies having Best's rating of A/VII or better, licensed or approved to transact business in the State of Texas, and shall obtain such insurance of the following types and minimum limits:

10.2.1 Workers' Compensation insurance. Substitutes to genuine Workers' Compensation Insurance will not be allowed.

10.2.2 Employers' Liability insurance with limits of not less than $1,000,000 per injury by accident, $1,000,000 per injury by disease, and $1,000,000 per bodily injury by disease.

10.2.3 Commercial general liability insurance with a limit of not less than $1,000,000 each occurrence and $2,000,000 in the annual aggregate. Policy shall cover liability for bodily injury, personal injury, and property damage and products/completed operations arising out of the business operations of the policyholder.

10.2.4 Business Automobile Liability coverage with a combined Bodily Injury/Property Damage limit of not less than $1,000,000 each accident. The policy shall cover liability arising from the operation of licensed vehicles by policyholder.

10.3 County and the members of Commissioners Court shall be named as additional insured to all required coverage except for Workers' Compensation and Professional Liability (if required). All Liability policies including Workers' Compensation written on behalf of contractor, excluding Professional Liability, shall contain a waiver of subrogation in favor of County and members of Commissioners Court.

10.4 If required coverage is written on a claims-made basis, contractor warrants that any retroactive date applicable to coverage under the policy precedes the effective date of the contract; and that continuous coverage will be maintained or an extended discovery period will be exercised for a period of two (2) years beginning from the time that work under the agreement is completed.

10.5 Contractor shall not commence any portion of the work under this Contract until it has obtained the insurance required herein and certificates of such insurance have been filed with and approved by Fort Bend County.

10.6 No cancellation of or changes to the certificates, or the policies, may be made without sixty (60) days prior, written notification to Fort Bend County.

10.7 Approval of the insurance by Fort Bend County shall not relieve or decrease the liability of the Contractor.

Initials of Bidder: _____

11.0 INDEMNIFICATION:

Respondent shall save harmless County from and against all claims, liability, and expenses, including reasonable attorney's fees, arising from activities of respondent, its agents, servants or employees, performed under this agreement that result from the negligent act, error, or omission of respondent or any of respondent's agents, servants or employees.

11.1 Respondent shall timely report all such matters to Fort Bend County and shall, upon the receipt of any such claim, demand, suit, action, proceeding, lien or judgment, not later than the fifteenth day of each month; provide Fort Bend County with a written report on each such matter, setting forth the status of each matter, the schedule or planned proceedings with respect to each matter and the cooperation or assistance, if any, of Fort Bend County required by Respondent in the defense of each matter.

11.2 Respondent's duty to defend, indemnify and hold Fort Bend County harmless shall be absolute. It shall not abate or end by reason of the expiration or termination of any contract unless otherwise agreed by Fort Bend County in writing. The provisions of this section shall survive the termination of the contract and shall remain in full force and effect with respect to all such matters no matter when they arise.

11.3 In the event of any dispute between the parties as to whether a claim, demand, suit, action, proceeding, lien or judgment appears to have been caused by or appears to have arisen out of or in connection with acts or omissions of Respondent, Respondent shall never-the-less fully defend such claim, demand, suit, action, proceeding, lien or judgment until and unless there is a determination by a court of competent jurisdiction that the acts and omissions of Respondent are not at issue in the matter.

11.4 Respondent's indemnification shall cover, and Respondent agrees to indemnify Fort Bend County, in the event Fort Bend County is found to have been negligent for having selected Respondent to perform the work described in this request.

11.5 The provision by Respondent of insurance shall not limit the liability of Respondent under an agreement.

11.6 Respondent shall cause all trade contractors and any other contractor who may have a contract to perform construction or installation work in the area where work will be performed under this request, to agree to indemnify Fort Bend County and to hold it harmless from all claims for bodily injury and property damage that may arise from said Respondent's operations. Such provisions shall be in form satisfactory to Fort Bend County.

11.7 Loss Deduction Clause - Fort Bend County shall be exempt from, and in no way liable for, any sums of money which may represent a deductible in any insurance

Initials of Bidder: _____

policy. The payment of deductibles shall be the sole responsibility of Respondent and/or trade contractor providing such insurance.

12.0 PREVAILING WAGES:

This project is subject to the prevailing wage rate requirements of Chapter 2258 of the Government Code. The Contractor shall pay Fort Bend County sixty dollars ($60.00) for each worker employed by the Contractor for the provision of services described herein for each calendar day or part of the day that the worker is paid less than the below stated rates. Contractors may also visit www.wdol.gov/dba.aspx.

General Decision Number: TX20220038 02/25/2022
Superseded General Decision Number: TX20210038

State: Texas
Construction Type: Highway

Counties: Austin, Brazoria, Chambers, Fort Bend, Galveston, Hardin, Harris, Jefferson, Liberty, Montgomery, Orange, San Jacinto and Waller Counties in Texas.

HIGHWAY CONSTRUCTION PROJECTS (excluding tunnels, building structures in rest area projects & railroad construction; bascule, suspension & spandrel arch bridges designed for commercial navigation, bridges involving marine construction; and other major bridges).

Note: Contracts subject to the Davis-Bacon Act are generally required to pay at least the applicable minimum wage rate required under Executive Order 14026 or Executive Order 13658. Please note that these Executive Orders apply to covered contracts entered into by the federal government that are subject to the Davis-Bacon Act itself, but do not apply to contracts subject only to the Davis-Bacon Related Acts, including those set forth at 29 CFR 5.1(a)(2)-(60).

If the contract is entered into on or after January 30, 2022, or the contract is renewed or extended (e.g., an option is exercised) on or after January 30, 2022, Executive Order 14026 generally applies to the contract. The contractor must pay all covered workers at least $15.00 per hour (or the applicable wage rate listed on this wage determination, if it is higher) for all hours spent performing on that contract in 2022.

If the contract was awarded on or between January 1, 2015 and January 29, 2022, and the contract is not renewed or extended on or after January 30, 2022, Executive Order 13658 generally applies to the contract. The contractor must pay all covered workers at least $11.25 per hour (or the applicable wage rate listed on this wage determination, if it is higher) for all hours spent performing on that contract in 2022.

The applicable Executive Order minimum wage rate will be adjusted annually. If this contract is covered by one of the Executive Orders and a classification considered necessary for performance of work on the contract does not appear on this wage determination, the contractor must still submit a conformance request.

Initials of Bidder: _____

Additional information on contractor requirements and worker protections under the Executive Orders is available at www.dol.gov/whd/govcontracts.

Modification Number	Publication Date
0	01/07/2022
1	02/25/2022

* SUTX2011-013 08/10/2011

	Rates	Fringes
CEMENT MASON/CONCRETE FINISHER (Paving and Structures)	$ 12.98 **	
ELECTRICIAN	$ 27.11	
FORM BUILDER/FORM SETTER		
Paving & Curb	$ 12.34 **	
Structures	$ 12.23 **	
LABORER		
Asphalt Raker	$ 12.36 **	
Flagger	$ 10.33 **	
Laborer, Common	$ 11.02 **	
Laborer, Utility	$ 11.73 **	
Pipelayer	$ 12.12 **	
Work Zone Barricade Servicer	$ 11.67 **	
PAINTER (Structures)	$ 18.62	
POWER EQUIPMENT OPERATOR:		
Asphalt Distributor	$ 14.06 **	
Asphalt Paving Machine	$ 14.32 **	
Broom or Sweeper	$ 12.68 **	
Concrete Pavement Finishing Machine	$ 13.07 **	
Concrete Paving, Curing, Float, Texturing Machine	$ 11.71 **	
Concrete Saw	$ 13.99 **	
Crane, Hydraulic 80 Tons or less	$ 13.86 **	
Crane, Lattice boom 80 tons or less	$ 14.97 **	
Crane, Lattice boom over 80 Tons	$ 15.80	
Crawler Tractor	$ 13.68 **	
Excavator, 50,000 pounds or less	$ 12.71 **	
Excavator, Over 50,000 pounds	$ 14.53 **	
Foundation Drill, Crawler Mounted	$ 17.43	
Foundation Drill, Truck Mounted	$ 15.89	
Front End Loader 3 CY or Less	$ 13.32 **	

Initials of Bidder: _____

Front End Loader, Over 3 CY	$ 13.17 **
Loader/Backhoe	$ 14.29 **
Mechanic	$ 16.96
Milling Machine	$ 13.53 **
Motor Grader, Fine Grade	$ 15.69
Motor Grader, Rough	$ 14.23 **
Off Road Hauler	$ 14.60 **
Pavement Marking Machine	$ 11.18 **
Piledriver	$ 14.95 **
Roller, Asphalt	$ 11.95 **
Roller, Other	$ 11.57 **
Scraper	$ 13.47 **
Spreader Box	$ 13.58 **
Servicer	$ 13.97 **
Steel Worker	
Reinforcing Steel	$ 15.15
Structural Steel Welder	$ 12.85 **
Structural Steel	$ 14.39 **
TRUCK DRIVER	
Low Boy Float	$ 16.03
Single Axle	$ 11.46 **
Single or Tandem Axle Dump	$ 11.48 **
Tandem Axle Tractor w/Semi Trailer	$ 12.27 **

WELDERS - Receive rate prescribed for craft performing operation to which welding is incidental.

** Workers in this classification may be entitled to a higher minimum wage under Executive Order 14026 ($15.00) or 13658 ($11.25). Please see the Note at the top of the wage determination for more information.

Note: Executive Order (EO) 13706, Establishing Paid Sick Leave for Federal Contractors applies to all contracts subject to the Davis-Bacon Act for which the contract is awarded (and any solicitation was issued) on or after January 1, 2017. If this contract is covered by the EO, the contractor must provide employees with 1 hour of paid sick leave for every 30 hours they work, up to 56 hours of paid sick leave each year. Employees must be permitted to use paid sick leave for their own illness, injury or other health-related needs, including preventive care; to assist a family member (or person who is like family to the employee) who is ill, injured, or has other health-related needs, including preventive care; or for reasons resulting from, or to assist a family member (or person who is like family to the employee) who is a victim of, domestic violence, sexual assault, or stalking. Additional information on contractor requirements and worker protections under the EO is available at www.dol.gov/whd/govcontracts.

Initials of Bidder: _____

Unlisted classifications needed for work not included within the scope of the classifications listed may be added after award only as provided in the labor standards contract clauses (29CFR 5.5 (a) (1) (ii)).

The body of each wage determination lists the classification and wage rates that have been found to be prevailing for the cited type(s) of construction in the area covered by the wage determination. The classifications are listed in alphabetical order of "identifiers" that indicate whether the particular rate is a union rate (current union negotiated rate for local), a survey rate (weighted average rate) or a union average rate (weighted union average rate).

Union Rate Identifiers

A four letter classification abbreviation identifier enclosed in dotted lines beginning with characters other than "SU" or "UAVG" denotes that the union classification and rate were prevailing for that classification in the survey. Example: PLUM0198-005 07/01/2014. PLUM is an abbreviation identifier of the union which prevailed in the survey for this classification, which in this example would be Plumbers. 0198 indicates the local union number or district council number where applicable, i.e., Plumbers Local 0198. The next number, 005 in the example, is an internal number used in processing the wage determination. 07/01/2014 is the effective date of the most current negotiated rate, which in this example is July 1, 2014.

Union prevailing wage rates are updated to reflect all rate changes in the collective bargaining agreement (CBA) governing this classification and rate.

Survey Rate Identifiers

Classifications listed under the "SU" identifier indicate that no one rate prevailed for this classification in the survey and the published rate is derived by computing a weighted average rate based on all the rates reported in the survey for that classification. As this weighted average rate includes all rates reported in the survey, it may include both union and non-union rates. Example: SULA2012-007 5/13/2014. SU indicates the rates are survey rates based on a weighted average calculation of rates and are not majority rates. LA indicates the State of Louisiana. 2012 is the year of survey on which these classifications and rates are based. The next number, 007 in the example, is an internal number used in producing the wage determination. 5/13/2014 indicates the survey completion date for the classifications and rates under that identifier.

Survey wage rates are not updated and remain in effect until a new survey is conducted.

Union Average Rate Identifiers

Classification(s) listed under the UAVG identifier indicate that no single majority rate prevailed for those classifications; however, 100% of the data reported for the classifications was union data. EXAMPLE: UAVG-OH-0010 08/29/2014. UAVG indicates that the rate is a weighted union average rate. OH indicates the state. The next number, 0010 in the example, is an internal number used in producing the wage determination. 08/29/2014 indicates the survey completion date for the classifications and rates under that identifier.

Initials of Bidder: _____

A UAVG rate will be updated once a year, usually in January of each year, to reflect a weighted average of the current negotiated/CBA rate of the union locals from which the rate is based.

WAGE DETERMINATION APPEALS PROCESS

1.) Has there been an initial decision in the matter? This can be:

* an existing published wage determination
* a survey underlying a wage determination
* a Wage and Hour Division letter setting forth a position on a wage determination matter
* a conformance (additional classification and rate) ruling

On survey related matters, initial contact, including requests for summaries of surveys, should be with the Wage and Hour Regional Office for the area in which the survey was conducted because those Regional Offices have responsibility for the Davis-Bacon survey program. If the response from this initial contact is not satisfactory, then the process described in 2.) and 3.) should be followed.

With regard to any other matter not yet ripe for the formal process described here, initial contact should be with the Branch of Construction Wage Determinations. Write to:

Branch of Construction Wage Determinations
Wage and Hour Division
U.S. Department of Labor
200 Constitution Avenue, N.W.
Washington, DC 20210

2.) If the answer to the question in 1.) is yes, then an interested party (those affected by the action) can request review and reconsideration from the Wage and Hour Administrator (See 29 CFR Part 1.8 and 29 CFR Part 7). Write to:

Wage and Hour Administrator
U.S. Department of Labor
200 Constitution Avenue, N.W.
Washington, DC 20210

The request should be accompanied by a full statement of the interested party's position and by any information (wage payment data, project description, area practice material, etc.) that the requestor considers relevant to the issue.

3.) If the decision of the Administrator is not favorable, an interested party may appeal directly to the Administrative Review Board (formerly the Wage Appeals Board). Write to:

Administrative Review Board
U.S. Department of Labor
200 Constitution Avenue, N.W.

Initials of Bidder: _____

Washington, DC 20210

4.) All decisions by the Administrative Review Board are final.

13.0 PERMITS:

It shall be the sole responsibility of the successful bidder to obtain all required permits in the name of Fort Bend County.

14.0 CONTRACTOR'S RESPONSIBILITY FOR WORK:

14.1 Preconstruction Work. Contractor shall do (or cause to be done) the following as preconstruction work:

14.1.1 On an as needed basis as determined by Fort Bend County, cause the Contractor's personnel to meet with Fort Bend County and the Engineer to discuss the status of the Project.

14.1.2 Review drawings and specifications with the Engineer to permit the Contractor and the Engineer to determine the compliance of the proposed facility with applicable building codes.

14.2 Construction Work. Contractor shall do (or cause to be done) the following as construction work:

14.2.1 Perform (or cause to be performed) all preparatory work at the construction site required herein, including (without limitation) soil and concrete testing and demolition of improvements existing at the construction site and all actions necessary for compliance with all laws and regulations as to actions to be taken by owners or contractors before construction begins, including without limitation those in regard to archaeological and environmental requirements.

14.2.2 Construct and install (or cause to be constructed and installed) the Project on the construction site in accordance with this Contract and the drawings and specifications approved by Fort Bend County.

14.2.3 Furnish (or cause to be furnished) all materials, supplies, equipment, tools, labor, supervision, utilities, transportation, and other materials and services necessary to complete the Project described herein.

14.2.4 Materials testing necessary for the Project and required by laws and regulations, construction industry standards as approved by Fort Bend County and this Contract; the frequency of testing shall

be approved by Fort Bend County. **It is the contractor's responsibility to engage a material testing laboratory to perform testing on the structural concrete to be used for foundation work in this project. The cost of testing shall be incidental to bid item for drill shaft foundation. Testing of concrete shall comply with current TXDOT criteria. Contractor has to submit the name of the testing laboratory, intended to be used by the contractor for this project, for County's approval.**

14.3 Standards for Review and Approval. Fort Bend County acknowledges that in order to meet the deadlines for the completion of the Project, and in order to accomplish the efficient completion of the Project, the Contractor may submit matters to Fort Bend County in stages for approval or consent. Upon receipt of any matter submitted by the Contractor for review and approval, Fort Bend County shall review the same and shall diligently and promptly (but in any event within 14 calendar days for any such matter, other than a proposed change order, and within 28 calendar days for a proposed change order) give the Contractor notice of Fort Bend County's approval or disapproval, setting forth in detail all reasons for any disapproval. Fort Bend County's right to disapprove any such matter submitted (other than a proposed change order) shall be limited to the elements thereof (a) which do not conform substantially to matters previously approved, (b) which are new elements not previously presented and approved and the Contractor is unable to demonstrate that such new element is reasonably necessary for completion of the Project, or (c) which depict matters that are violations of this Contract or applicable laws and regulations.

14.3.1 If Fort Bend County disapproves of a particular matter or Proposed Change Order, the Contractor shall have the right to resubmit such matter or Proposed Change Order to Fort Bend County, altered to satisfy Fort Bend County's basis for disapproval. Any resubmission shall be subject to review and approval by Fort Bend County.

14.3.2 Fort Bend County and the Contractor shall attempt in good faith to resolve any disputes concerning the approval of any aspect of the Project expeditiously, so as not to delay the completion of the Project in accordance with this Contract.

14.3.3 Expedited Approvals. Fort Bend County recognizes the importance of expeditious action upon all matters submitted to Fort Bend County for review and approval and of expeditious response to those aspects of the Project requiring approval by governmental authorities having jurisdiction there over. Fort Bend County agrees to exercise its rights of review and approval hereunder with due diligence, reasonableness, and good faith. Fort Bend County shall use its reasonable efforts to expedite any required review of the Project or other matters by any governmental authority.

Initials of Bidder: _____

14.4 Changes.

14.4.1 General. Fort Bend County may make changes to the Project by altering, adding to, or deducting from the Project. All changes in the Project which (a) require an adjustment in the contract sum or an adjustment in the final completion date or (b) involve a material change in the overall scope or function of the Project shall be requested and authorized before commencing such changes by use of written change order notices, Proposed Change Orders and Change Orders, which change order procedure shall be the exclusive means to effect such changes in the Project.

14.4.2 Change Order Procedure. If at any time Fort Bend County desires to make any change in the Project requiring the issuance of a Change Order, Fort Bend County shall so advise the Contractor in writing by delivery to the Contractor of a written notice describing the change. Upon receipt of such notice initiated by Fort Bend County, the Contractor shall within a reasonable period of time advise Fort Bend County of the Contractor's proposal for the adjustments, if any, in the contract sum, the schedule of values, and the final completion date attributable to such change by delivering a written notice thereof (the "Proposed Change Order") to Fort Bend County. Such Proposed Change Order shall contain a description of the proposed change and shall set forth the Contractor's estimate of the increase or decrease, if any, in the contract sum and the change, if any, in the schedule of values and the final completion date attributable to such change. If the Contractor desires to make a change in the Project requiring the issuance of a change order, the Contractor shall deliver to Fort Bend County a Proposed Change Order. Upon execution by Fort Bend County, a Proposed Change Order shall constitute (and be defined herein as) a "Change Order" for purposes of this Contract. The Contractor shall forthwith perform the work as changed in accordance with such Change Order. All work performed pursuant to a Change Order shall be performed in accordance with the terms of this Contract. All Proposed Change Orders shall be submitted for approval by Fort Bend County. No action, acquiescence or inaction by Fort Bend County or any representative of Fort Bend County shall be construed to be a waiver of requirements set forth in this Contract in regard to Change Orders or ratification of a violation of such requirements, and all acts in violation of this provision shall be considered void.

14.4.3 Change Order Authorization. Each Change Order shall be signed by Fort Bend County and an authorized representative of the Contractor.

14.4.4 Contract Sum Adjustments. The contract sum and the schedule of values shall be adjusted only as a result of a Change Order requiring such adjustment. Any extra work performed without a proper Change Order shall be considered voluntary and not subject to additional compensation.

Initials of Bidder: _____

The Contractor shall not be entitled to an adjustment in the contract sum (or a Change Order permitting such adjustment) or to damages as a result of any delays in the Project caused by the acts or omissions of Fort Bend County, provided that this sentence is not applicable to delays that constitute more than 90 days in any 365-day period or cause the Project to be interrupted for a continuous period of 45 days through no fault of the Contractor.

14.4.5 When Fort Bend County and the Contractor agree upon the adjustments in the contract sum, the schedule of values, and the final completion date attributable to such adjustment, such agreement will be documented by preparation and if approved by the Fort Bend County Commissioners Court, execution of an appropriate Change Order.

14.5 Site Access. Prior to the transfer date, Fort Bend County and the Contractor shall have uninterrupted access to the construction site. Subsequent to the transfer date, Fort Bend County will permit the Contractor, the Engineer, and their representatives and subcontractors to enter upon the Project at times reasonably necessary to complete the punch list items.

14.6 Applicable Laws and Regulations. Contractor shall in its performance of the Project comply with all applicable laws and regulations. Any delays in the prosecution of the Project caused by any changes in the laws and regulations or the application or enforcement of the laws and regulations may entitle the Contractor to an extension of time.

14.7 Familiarity with Project. The Contractor represents and accepts that it has: (a) visited the property(ies), (b) taken such other steps as may be necessary to ascertain the nature and location of the Project and the general and local conditions which affect the Project or the cost thereof, (c) investigated the labor situation as regards to the Project, (d) examined the property(ies), the obstacles which may be encountered and all other observable conditions having a bearing upon the performance of the Project, the superintendence of the Project, the time of completion and all other relevant matters, and (e) reported to Fort Bend County the results of all of the foregoing. The Contractor represents that it is familiar with all phases of the Project and the matters that may affect the Project or its prosecution under this Contract.

14.8 Standard of Performance. The Contractor shall prosecute (or cause to be prosecuted) the Project in accordance with the best efforts for the construction and development of projects similar to the Project in the State of Texas, using qualified, careful, and efficient contractors and workers and in conformity with the provisions of this Contract. The Contractor shall perform the work in a good and workmanlike manner.

14.9 Warranty of Contractor. The Contractor warrants to Fort Bend County that: (i) the Contractor possesses the skill and knowledge ordinarily possessed by well-

Initials of Bidder: _____

informed members of its trade or profession and the Contractor will use its best efforts to ensure that the services provided under this Contract will be performed, delivered, and conducted in accordance with the best professional standards and in accordance with industry standards, and (ii) the Contractor is fully experienced and properly qualified to perform the class of work provided for herein, and that it is properly equipped, organized and financed to perform such work, and (iii) following the date of acceptance of this Contract, the services provided by the Contractor to Fort Bend County will conform to the representations contained in this Contract, including all attachments, schedules and exhibits. All warranties provided by the Contractor in this Contract shall be cumulative, shall be deemed consistent and not in conflict, are intended to be given full force and effect and to be interpreted expansively to give the broadest warranty protection to Fort Bend County.

14.10 Contractor's Personnel. Contractor shall employ only competent, skilled personnel for the Project. Prior to the final completion date, the Contractor shall maintain a superintendent who shall be authorized to act on behalf of the Contractor and with whom Fort Bend County may consult at all reasonable times. The superintendent shall not be transferred from the Project without Fort Bend County's consent (which shall not be unreasonably withheld or delayed); provided, however, the superintendent shall not be assigned solely to the Project and shall be entitled to spend reasonable time working on matters unrelated to the Project so long as such work on other matters does not render the superintendent unavailable to the Project or unavailable to Fort Bend County. However, such obligation to furnish the superintendent and such staff personnel shall not be construed (a) to preclude the promotion within the Contractor's organization of any person assigned to the Project or (b) to give rise to any liability of the Contractor if any person assigned to the Project (including, without limitation, the superintendent) leaves the Contractor's employment. If the superintendent is transferred from the Project, Fort Bend County shall have the right to approve the replacement superintendent (which approval will not be unreasonably withheld or delayed). The Contractor, the Architect, and the other subcontractors shall comply with all applicable health, safety, and loss prevention rules of applicable governmental authorities. The Contractor shall, at its own expense, remove from the Project any person who fails to comply with such rules and instructions. The Contractor shall at all times enforce strict discipline and good order among its employees and shall not employ on the Project any unfit person or anyone not skilled in the work assigned to him. Fort Bend County may, upon written notice to the Contractor, require the Contractor to remove an individual immediately from providing services for the following reasons: violation of the terms and conditions of this Contract; violation of Fort Bend County’s or the Contractor’s work rules and regulations; criminal activity; or violation of state, federal, or municipal statutes. Fort Bend County may, upon thirty (30) days written notice to the Contractor, require the removal of any individual from providing services without cause.

Initials of Bidder: _____

14.11 Inspection. The Project and all parts thereof shall be subject to inspection from time to time by inspectors designated by Fort Bend County. No such inspections shall relieve The Contractor of any of its obligations hereunder. Neither failure to inspect nor failure to discover or reject any of the work as not in accordance with the drawings and specifications or any provision of this Contract shall be construed to imply an acceptance of such work or to relieve the Contractor of any of its obligations hereunder. Fort Bend County agrees that its right of inspection shall be used reasonably and in a timely manner so as not to delay orderly completion of the Project.

14.12 Protection Against Risks. The Contractor shall take all precautions which are necessary and adequate, against conditions created during the progress of the Project which involve a risk of bodily harm to persons or a risk of damage or loss to any property. The Contractor shall regularly inspect all work, materials and equipment to discover and determine any such conditions and shall be responsible for discovery, determination, and correction of any such conditions. The Contractor shall comply with all federal, state, and local occupational hazard and safety standards, codes and regulations applicable in the jurisdiction where the Project is being performed. The Contractor shall include the substance of this clause in its entirety in all subcontracts for any work to be performed at the construction site.

14.13 Equipment. Except as expressly provided herein to the contrary, the Contractor shall furnish (or cause to be furnished) all construction, transportation, installation, tools, and other equipment and facilities required for the performance of the Project within the times specified herein. Such equipment and facilities shall be serviceable and kept fit for the uses intended. Defective items shall be removed from the construction site promptly and at the Contractor's cost. The Contractor shall schedule (or cause to be scheduled) its other operations so as to not interfere with its duty to timely furnish the necessary equipment and facilities and personnel to operate the same at the times necessary for the orderly completion of the Project.

14.14 Materials. Except as may be specifically provided otherwise in the Contract or approved in advance by Fort Bend County, the Contractor shall provide Fort Bend County with copies of material testing reports and to cause all materials, equipment, and fabricated items incorporated in the Project to be new and of a suitable grade of their respective kinds for their intended use.

15.0 TERMINATION:

15.1 Fort Bend County may terminate the Contract if the Contractor:

15.1.1 Persistently or repeatedly refuses or fails to supply enough properly skilled workers or proper materials.

Initials of Bidder: _____

15.1.2 Fails to make payment to Subcontractors for materials or labor in accordance with the respective agreements between the Contractor and the Subcontractor.

15.1.3 Persistently disregards laws, ordinances, or rules, regulations or orders of a public authority having jurisdiction.

15.1.4 Otherwise is guilty of substantial breach of a provision of the Contract Documents.

15.2 When any of the above reasons exists, Fort Bend County may, without prejudice to any other rights or remedies of Fort Bend County and after giving the Contractor and the Contractor's surety, if any, seven days' written notice, terminate employment of the Contractor and may, subject to any prior rights of the surety:

15.2.1 Take possession of the site and of all materials, equipment, tools, and construction equipment and machinery thereon owned by the Contractor.

15.2.2 Finish the Project by whatever reasonable method Fort Bend County may deem expedient.

15.3 Either party may terminate this Contract at any time by providing thirty (30) days written notice.

15.4 When Fort Bend County terminates the Contract for one of the reasons stated in this section, the Contractor shall not be entitled to receive further payment until the Project is finished. Therefore, the Contractor shall be promptly paid for all work actually and satisfactorily completed.

16.0 COMPLETION, TRANSFER, & ACCEPTANCE:

16.1 Final Completion. Upon the occurrence of the final completion date, the punch list items shall be promptly commenced and thereafter completed within thirty (30) days after final completion.

16.2 Transfer and Acceptance. Upon the occurrence of final completion, care, custody and control of the Project shall pass to Fort Bend County. As referenced herein, the "Transfer Date" shall mean the date on which the care, custody and control of the Project passes to Fort Bend County. Subsequent to the Transfer Date all risk of loss with respect to the Project shall be by Fort Bend County and the Contractor shall be thereafter obligated to cover the Project with their Insurance.

Initials of Bidder: _____

17.0 SUSPENSION BY FORT BEND COUNTY FOR CONVENIENCE:

17.1 Fort Bend County may, without cause, order the Contractor in writing to suspend, delay or interrupt the Project in whole or in part for such period of time as Fort Bend County may determine.

17.2 An adjustment shall be made for increase in the cost of performance, caused by suspension, delay or interruption. No adjustment shall be made to the extent:

17.2.1 That performance is, was or would have been so suspended, delayed or interrupted by another cause for which the Contractor is responsible.

17.2.2 That an equitable adjustment is made or denied under another provision of this Contract.

17.3 Adjustments made in the cost of performance may have a mutually agreed fixed or percentage fee.

18.0 INDEPENDENT CONTRACTOR:

The Contractor shall be an independent contractor and any provisions of this Contract that may appear to give Fort Bend County the right to direct the Contractor as to the details of the manner of doing the Project shall be deemed to mean that the Contractor shall follow the desires of Fort Bend County in the results of the Project only and not in the means whereby the Project is to be accomplished. The Contractor shall be responsible as to the details of completing the Project. Neither the agents, representatives, nor employees of the Contractor, shall be deemed to be the agents, representatives, or employees of Fort Bend County. The Contractor further represents that it accepts a fiduciary role and responsibility with respect to Fort Bend County and will, to its best abilities, act in the best interests of Fort Bend County and the timely completion of the Project. The Contractor agrees and understands that neither it nor any of its agents or employees may act in the name of Fort Bend County except and unless specifically authorized in writing by Fort Bend County to do so. The Contractor shall furnish construction administration and management services and use the Contractor's best efforts to complete the Project in an expeditious and economical manner consistent with the interests of Fort Bend County.

19.0 NOTICE

19.1 All written notices, demands, and other papers or documents to be delivered to Fort Bend County under this Contract shall be delivered to the Engineering Department, 301 Jackson, Richmond, Texas 77469, or at such other place or places as Fort Bend County may from time to time designate by written notice delivered to the Contractor. For purposes of notice under this Contract, a copy of any notice or communication hereunder shall also be forwarded to the following address: Fort Bend County, 301 Jackson Street, Richmond, Texas 77469, Attention: County Judge.

Initials of Bidder: _____

19.2 All written notices, demands, and other papers or documents to be delivered to the Contractor under this Contract shall be delivered to the Authorized Representative identified in the Contract documents or such other place or places as the Contractor may designate by written notice delivered to Fort Bend County.

20.0 RECORDS:

20.1 Fort Bend County shall be the absolute and unqualified owner of all drawings, preliminary layouts, record drawings, sketches and other documents prepared pursuant to the Contract by Contractor.

20.2 The Contractor agrees to maintain and preserve for a period of at least five years after the earlier of the expiration of the defects period or termination of this Contract, accurate and complete records relating to the performance of the Project. The Contractor agrees to, upon request, provide Fort Bend County with such records.

21.0 SUCCESSORS & ASSIGNS:

21.1 Fort Bend County and the Contractor bind themselves and their successors, executors, administrators and assigns to the other party of this Contract and to the successors, executors, administrators and assigns of such other party, in respect to all covenants of this Contract.

21.2 Neither Fort Bend County nor the Contractor shall assign, sublet or transfer its interest in this Contract without the prior written consent of the other.

21.3 Nothing herein shall be construed as creating any personal liability on the part of any officer or agent of any public and/or governmental body that may be a party hereto.

22.0 PUBLIC CONTACT:

Contact with the news media, citizens of Fort Bend County or governmental agencies shall be the sole responsibility of Fort Bend County. Under no circumstances, whatsoever, shall Contractor release any material or information developed in the performance of its services hereunder without the express written permission of Fort Bend County, except where required to do so by law.

23.0 MODIFICATIONS:

This instrument contains the entire Contract between the parties relating to the rights herein granted and obligations herein assumed. Any oral or written representations or modifications concerning this instrument shall be of no force and effect excepting a subsequent written modification signed by both parties hereto.

Initials of Bidder: _____

24.0 SILENCE OF SPECIFICATIONS:

The apparent silence of specifications as to any detail, or the apparent omission from it of a detailed description concerning any point, shall be regarded as meaning that only the best commercial practice is to prevail and that only material and workmanship of the finest quality are to be used. All interpretations of specifications shall be made on the basis of this statement. The items furnished under this contract shall be new, unused of the latest product in production to commercial trade and shall be of the highest quality as to materials used and workmanship. Manufacturer furnishing these items shall be experienced in design and construction of such items and shall be an established supplier of the item bid.

25.0 SEVERABILITY:

In the event one or more of the provisions contained in these requirements or the specifications shall for any reason be held to be invalid, illegal or unenforceable in any respect, such invalidity, illegality, or unenforceability shall not affect any other provision hereof and these requirements or the specifications shall be construed as if such invalid, illegal, or unenforceable provision had never been contained herein.

26.0 GOVERNING FORMS:

In the event of any conflict between the terms and provisions of these requirements and the specifications, the specifications shall govern. In the event of any conflict of interpretation of any part of this overall document, Fort Bend County's interpretation shall govern.

27.0 TAX EXEMPT:

Fort Bend County is exempt from state and local sales and use taxes under Section 151.309 of the Texas Tax Code. This Contract is deemed to be a separate contract for Texas tax purposes, and as such, Fort Bend County hereby issues its Texas Exemption for the purchase of any items qualifying for exemption under this Contract. Contractor is to issue its Texas Resale Certificate to vendors and subcontractors for such items qualifying for this exemption, and further, contractor should state these items at cost.

28.0 ENTIRE AGREEMENT:

The Parties agree that this Contract contains all of the terms and conditions of the understanding of the parties relating to the subject matter hereof. All prior negotiations, discussions, correspondence and preliminary understandings between the parties and others relating hereto are superseded by this Contract. By entering into this Contract, the parties do not intend to create any obligations, express or implied, other than those specifically set out in this Contract.

29.0 APPLICABLE LAW & VENUE

This Contract shall be construed under and in accord with the laws of the State of Texas, and all obligations of the parties created hereunder are performable in Fort Bend County, Texas, and that

Initials of Bidder: _____

venue for any litigation arising out of or related to this Contract shall lie solely in the court of appropriate jurisdiction located in Fort Bend County, Texas.

30.0 ENCLOSURE:

The following being incorporated herein by reference for all purposes as though fully set forth herein word for word.

Enclosure #1 – Specifications and Plans

31.0 PRICING: Complete unit pricing form.

32.0 PROJECT DURATION:

Bidder agrees, if awarded the contract, to complete all work required by the contract documents **within _____ calendar days (maximum 90 days)** after issuance of a purchase order by the County Purchasing Agent and notice to proceed by the Engineering Department.

33.0 AWARD:

This contract will be awarded to the overall lowest and best bid.

34.0 TEXAS ETHICS COMMISSION FORM 1295:

34.1 Effective January 1, 2016 all contracts executed by Commissioners Court, regardless of the dollar amount, will require completion of Form 1295 "Certificate of Interested Parties", per the new Government Code Statute §2252.908. All vendors submitting a response to a formal Bid, RFP, SOQ or any contracts, contract amendments, renewals or change orders are required to complete the Form 1295 online through the State of Texas Ethics Commission website. Please visit: https://www.ethics.state.tx.us/filinginfo/1295/

34.2 On-line instructions:

34.2.1 Name of governmental entity is to read: Fort Bend County.

34.2.2 Identification number used by the governmental entity is: B22-064.

34.2.3 Description is the title of the solicitation: Construction of Right Turn Lane for West Bellfort at SH 99 for Fort Bend County Mobility Bond Project No. 20403.

34.3 Apparent low bidder(s) will be required to provide the Form 1295 within three (3) calendar days from notification; however, if your company is publicly traded you are not required to complete this form.

Initials of Bidder: _____

35.0 STATE LAW REQUIREMENTS FOR CONTRACTS:

The contents of this section are required by Texas Law and are included by County regardless of content.

35.1 Agreement to Not Boycott Israel Chapter 2271 Texas Government Code: Contractor verifies that if Contractor employs ten (10) or more full-time employees and this Agreement has a value of $100,000 or more, Contractor does not boycott Israel and will not boycott Israel during the term of this Agreement.

35.2 Texas Government Code Section 2251.152 Acknowledgment: By signature on vendor form, Contractor represents pursuant to Section 2252.152 of the Texas Government Code, that Contractor is not listed on the website of the Comptroller of the State of Texas concerning the listing of companies that are identified under Section 806.051, Section 807.051 or Section 2253.153.

36.0 HUMAN TRAFFICKING:

By acceptance of this contract, Contractor acknowledges that Fort Bend County is opposed to human trafficking and that no County funds will be used in support of services or activities that violate human trafficking laws

37.0 ADDITIONAL REQUIRED FORMS:

All vendors submitting are required to complete and return with submission:

37.1 Vendor Form

37.2 W9 Form

37.3 Tax Form/Debt/Residence Certification

37.4 Contractor Acknowledgement of Stormwater Management Program

Initials of Bidder: _____

Contract Sheet
Bid 22-064

THE STATE OF TEXAS
COUNTY OF FORT BEND

This memorandum of agreement made and entered into on the _____ day of _____, 20_____, by and between Fort Bend County in the State of Texas (hereinafter designated County), acting herein by County Judge KP George, by virtue of an order of Fort Bend County Commissioners Court, and _____ (hereinafter designated Contractor).

(company name)

WITNESSETH:

The Contractor and the County agree that the bid and specifications for the **Construction of Right Turn Lane for West Bellfort at SH 99 for Fort Bend County Mobility Bond Project No. 20403** which are hereto attached and made a part hereof, together with this instrument and the bond (when required) shall constitute the full agreement and contract between parties and for furnishing the items set out and described; the County agrees to pay the prices stipulated in the accepted bid.

It is further agreed that this contract shall not become binding or effective until signed by the parties hereto and a purchase order authorizing the items desired has been issued.

Executed at Richmond, Texas this _____day of _____20_____.

Fort Bend County, Texas

By:_____
County Judge, KP George

By:_____
Signature of Contractor

By:_____
Printed Name and Title

Form **W-9**
(Rev. December 2014)
Department of the Treasury
Internal Revenue Service

Request for Taxpayer Identification Number and Certification

Give Form to the requester. Do not send to the IRS.

Print or type
See **Specific Instructions** on page 2.

1 Name (as shown on your income tax return). Name is required on this line; do not leave this line blank.

2 Business name/disregarded entity name, if different from above

3 Check appropriate box for federal tax classification; check only **one** of the following seven boxes:
☐ Individual/sole proprietor or single-member LLC ☐ C Corporation ☐ S Corporation ☐ Partnership ☐ Trust/estate
☐ Limited liability company. Enter the tax classification (C=C corporation, S=S corporation, P=partnership) ▶ _____
Note. For a single-member LLC that is disregarded, do not check LLC; check the appropriate box in the line above for the tax classification of the single-member owner.
☐ Other (see instructions) ▶

4 Exemptions (codes apply only to certain entities, not individuals; see instructions on page 3):
Exempt payee code (if any) _____
Exemption from FATCA reporting code (if any) _____
(Applies to accounts maintained outside the U.S.)

5 Address (number, street, and apt. or suite no.)

Requester's name and address (optional)

6 City, state, and ZIP code

7 List account number(s) here (optional)

Part I Taxpayer Identification Number (TIN)

Enter your TIN in the appropriate box. The TIN provided must match the name given on line 1 to avoid backup withholding. For individuals, this is generally your social security number (SSN). However, for a resident alien, sole proprietor, or disregarded entity, see the Part I instructions on page 3. For other entities, it is your employer identification number (EIN). If you do not have a number, see *How to get a TIN* on page 3.

Note. If the account is in more than one name, see the instructions for line 1 and the chart on page 4 for guidelines on whose number to enter.

Social security number
☐☐☐ – ☐☐ – ☐☐☐☐

or

Employer identification number
☐☐ – ☐☐☐☐☐☐☐

Part II Certification

Under penalties of perjury, I certify that:

1. The number shown on this form is my correct taxpayer identification number (or I am waiting for a number to be issued to me); and
2. I am not subject to backup withholding because: (a) I am exempt from backup withholding, or (b) I have not been notified by the Internal Revenue Service (IRS) that I am subject to backup withholding as a result of a failure to report all interest or dividends, or (c) the IRS has notified me that I am no longer subject to backup withholding; and
3. I am a U.S. citizen or other U.S. person (defined below); and
4. The FATCA code(s) entered on this form (if any) indicating that I am exempt from FATCA reporting is correct.

Certification instructions. You must cross out item 2 above if you have been notified by the IRS that you are currently subject to backup withholding because you have failed to report all interest and dividends on your tax return. For real estate transactions, item 2 does not apply. For mortgage interest paid, acquisition or abandonment of secured property, cancellation of debt, contributions to an individual retirement arrangement (IRA), and generally, payments other than interest and dividends, you are not required to sign the certification, but you must provide your correct TIN. See the instructions on page 3.

Sign Here **Signature of U.S. person ▶** **Date ▶**

General Instructions

Section references are to the Internal Revenue Code unless otherwise noted.

Future developments. Information about developments affecting Form W-9 (such as legislation enacted after we release it) is at *www.irs.gov/fw9*.

Purpose of Form

An individual or entity (Form W-9 requester) who is required to file an information return with the IRS must obtain your correct taxpayer identification number (TIN) which may be your social security number (SSN), individual taxpayer identification number (ITIN), adoption taxpayer identification number (ATIN), or employer identification number (EIN), to report on an information return the amount paid to you, or other amount reportable on an information return. Examples of information returns include, but are not limited to, the following:

- Form 1099-INT (interest earned or paid)
- Form 1099-DIV (dividends, including those from stocks or mutual funds)
- Form 1099-MISC (various types of income, prizes, awards, or gross proceeds)
- Form 1099-B (stock or mutual fund sales and certain other transactions by brokers)
- Form 1099-S (proceeds from real estate transactions)
- Form 1099-K (merchant card and third party network transactions)
- Form 1098 (home mortgage interest), 1098-E (student loan interest), 1098-T (tuition)
- Form 1099-C (canceled debt)
- Form 1099-A (acquisition or abandonment of secured property)

Use Form W-9 only if you are a U.S. person (including a resident alien), to provide your correct TIN.

If you do not return Form W-9 to the requester with a TIN, you might be subject to backup withholding. See *What is backup withholding?* on page 2.

By signing the filled-out form, you:

1. Certify that the TIN you are giving is correct (or you are waiting for a number to be issued),

2. Certify that you are not subject to backup withholding, or

3. Claim exemption from backup withholding if you are a U.S. exempt payee. If applicable, you are also certifying that as a U.S. person, your allocable share of any partnership income from a U.S. trade or business is not subject to the withholding tax on foreign partners' share of effectively connected income, and

4. Certify that FATCA code(s) entered on this form (if any) indicating that you are exempt from the FATCA reporting, is correct. See *What is FATCA reporting?* on page 2 for further information.

Note. If you are a U.S. person and a requester gives you a form other than Form W-9 to request your TIN, you must use the requester's form if it is substantially similar to this Form W-9.

Definition of a U.S. person. For federal tax purposes, you are considered a U.S. person if you are:

- An individual who is a U.S. citizen or U.S. resident alien;
- A partnership, corporation, company, or association created or organized in the United States or under the laws of the United States;
- An estate (other than a foreign estate); or
- A domestic trust (as defined in Regulations section 301.7701-7).

Special rules for partnerships. Partnerships that conduct a trade or business in the United States are generally required to pay a withholding tax under section 1446 on any foreign partners' share of effectively connected taxable income from such business. Further, in certain cases where a Form W-9 has not been received, the rules under section 1446 require a partnership to presume that a partner is a foreign person, and pay the section 1446 withholding tax. Therefore, if you are a U.S. person that is a partner in a partnership conducting a trade or business in the United States, provide Form W-9 to the partnership to establish your U.S. status and avoid section 1446 withholding on your share of partnership income.

In the cases below, the following person must give Form W-9 to the partnership for purposes of establishing its U.S. status and avoiding withholding on its allocable share of net income from the partnership conducting a trade or business in the United States:

- In the case of a disregarded entity with a U.S. owner, the U.S. owner of the disregarded entity and not the entity;
- In the case of a grantor trust with a U.S. grantor or other U.S. owner, generally, the U.S. grantor or other U.S. owner of the grantor trust and not the trust; and
- In the case of a U.S. trust (other than a grantor trust), the U.S. trust (other than a grantor trust) and not the beneficiaries of the trust.

Foreign person. If you are a foreign person or the U.S. branch of a foreign bank that has elected to be treated as a U.S. person, do not use Form W-9. Instead, use the appropriate Form W-8 or Form 8233 (see Publication 515, Withholding of Tax on Nonresident Aliens and Foreign Entities).

Nonresident alien who becomes a resident alien. Generally, only a nonresident alien individual may use the terms of a tax treaty to reduce or eliminate U.S. tax on certain types of income. However, most tax treaties contain a provision known as a "saving clause." Exceptions specified in the saving clause may permit an exemption from tax to continue for certain types of income even after the payee has otherwise become a U.S. resident alien for tax purposes.

If you are a U.S. resident alien who is relying on an exception contained in the saving clause of a tax treaty to claim an exemption from U.S. tax on certain types of income, you must attach a statement to Form W-9 that specifies the following five items:

1. The treaty country. Generally, this must be the same treaty under which you claimed exemption from tax as a nonresident alien.
2. The treaty article addressing the income.
3. The article number (or location) in the tax treaty that contains the saving clause and its exceptions.
4. The type and amount of income that qualifies for the exemption from tax.
5. Sufficient facts to justify the exemption from tax under the terms of the treaty article.

Example. Article 20 of the U.S.-China income tax treaty allows an exemption from tax for scholarship income received by a Chinese student temporarily present in the United States. Under U.S. law, this student will become a resident alien for tax purposes if his or her stay in the United States exceeds 5 calendar years. However, paragraph 2 of the first Protocol to the U.S.-China treaty (dated April 30, 1984) allows the provisions of Article 20 to continue to apply even after the Chinese student becomes a resident alien of the United States. A Chinese student who qualifies for this exception (under paragraph 2 of the first protocol) and is relying on this exception to claim an exemption from tax on his or her scholarship or fellowship income would attach to Form W-9 a statement that includes the information described above to support that exemption.

If you are a nonresident alien or a foreign entity, give the requester the appropriate completed Form W-8 or Form 8233.

Backup Withholding

What is backup withholding? Persons making certain payments to you must under certain conditions withhold and pay to the IRS 28% of such payments. This is called "backup withholding." Payments that may be subject to backup withholding include interest, tax-exempt interest, dividends, broker and barter exchange transactions, rents, royalties, nonemployee pay, payments made in settlement of payment card and third party network transactions, and certain payments from fishing boat operators. Real estate transactions are not subject to backup withholding.

You will not be subject to backup withholding on payments you receive if you give the requester your correct TIN, make the proper certifications, and report all your taxable interest and dividends on your tax return.

Payments you receive will be subject to backup withholding if:

1. You do not furnish your TIN to the requester,
2. You do not certify your TIN when required (see the Part II instructions on page 3 for details),
3. The IRS tells the requester that you furnished an incorrect TIN,
4. The IRS tells you that you are subject to backup withholding because you did not report all your interest and dividends on your tax return (for reportable interest and dividends only), or
5. You do not certify to the requester that you are not subject to backup withholding under 4 above (for reportable interest and dividend accounts opened after 1983 only).

Certain payees and payments are exempt from backup withholding. See *Exempt payee code* on page 3 and the separate Instructions for the Requester of Form W-9 for more information.

Also see *Special rules for partnerships* above.

What is FATCA reporting?

The Foreign Account Tax Compliance Act (FATCA) requires a participating foreign financial institution to report all United States account holders that are specified United States persons. Certain payees are exempt from FATCA reporting. See *Exemption from FATCA reporting code* on page 3 and the Instructions for the Requester of Form W-9 for more information.

Updating Your Information

You must provide updated information to any person to whom you claimed to be an exempt payee if you are no longer an exempt payee and anticipate receiving reportable payments in the future from this person. For example, you may need to provide updated information if you are a C corporation that elects to be an S corporation, or if you no longer are tax exempt. In addition, you must furnish a new Form W-9 if the name or TIN changes for the account; for example, if the grantor of a grantor trust dies.

Penalties

Failure to furnish TIN. If you fail to furnish your correct TIN to a requester, you are subject to a penalty of $50 for each such failure unless your failure is due to reasonable cause and not to willful neglect.

Civil penalty for false information with respect to withholding. If you make a false statement with no reasonable basis that results in no backup withholding, you are subject to a $500 penalty.

Criminal penalty for falsifying information. Willfully falsifying certifications or affirmations may subject you to criminal penalties including fines and/or imprisonment.

Misuse of TINs. If the requester discloses or uses TINs in violation of federal law, the requester may be subject to civil and criminal penalties.

Specific Instructions

Line 1

You must enter one of the following on this line; **do not** leave this line blank. The name should match the name on your tax return.

If this Form W-9 is for a joint account, list first, and then circle, the name of the person or entity whose number you entered in Part I of Form W-9.

a. **Individual.** Generally, enter the name shown on your tax return. If you have changed your last name without informing the Social Security Administration (SSA) of the name change, enter your first name, the last name as shown on your social security card, and your new last name.

Note. ITIN applicant: Enter your individual name as it was entered on your Form W-7 application, line 1a. This should also be the same as the name you entered on the Form 1040/1040A/1040EZ you filed with your application.

b. **Sole proprietor or single-member LLC.** Enter your individual name as shown on your 1040/1040A/1040EZ on line 1. You may enter your business, trade, or "doing business as" (DBA) name on line 2.

c. **Partnership, LLC that is not a single-member LLC, C Corporation, or S Corporation.** Enter the entity's name as shown on the entity's tax return on line 1 and any business, trade, or DBA name on line 2.

d. **Other entities.** Enter your name as shown on required U.S. federal tax documents on line 1. This name should match the name shown on the charter or other legal document creating the entity. You may enter any business, trade, or DBA name on line 2.

e. **Disregarded entity.** For U.S. federal tax purposes, an entity that is disregarded as an entity separate from its owner is treated as a "disregarded entity." See Regulations section 301.7701-2(c)(2)(iii). Enter the owner's name on line 1. The name of the entity entered on line 1 should never be a disregarded entity. The name on line 1 should be the name shown on the income tax return on which the income should be reported. For example, if a foreign LLC that is treated as a disregarded entity for U.S. federal tax purposes has a single owner that is a U.S. person, the U.S. owner's name is required to be provided on line 1. If the direct owner of the entity is also a disregarded entity, enter the first owner that is not disregarded for federal tax purposes. Enter the disregarded entity's name on line 2, "Business name/disregarded entity name." If the owner of the disregarded entity is a foreign person, the owner must complete an appropriate Form W-8 instead of a Form W-9. This is the case even if the foreign person has a U.S. TIN.

Line 2

If you have a business name, trade name, DBA name, or disregarded entity name, you may enter it on line 2.

Line 3

Check the appropriate box in line 3 for the U.S. federal tax classification of the person whose name is entered on line 1. Check only one box in line 3.

Limited Liability Company (LLC). If the name on line 1 is an LLC treated as a partnership for U.S. federal tax purposes, check the "Limited Liability Company" box and enter "P" in the space provided. If the LLC has filed Form 8832 or 2553 to be taxed as a corporation, check the "Limited Liability Company" box and in the space provided enter "C" for C corporation or "S" for S corporation. If it is a single-member LLC that is a disregarded entity, do not check the "Limited Liability Company" box; instead check the first box in line 3 "Individual/sole proprietor or single-member LLC."

Line 4, Exemptions

If you are exempt from backup withholding and/or FATCA reporting, enter in the appropriate space in line 4 any code(s) that may apply to you.

Exempt payee code.

- Generally, individuals (including sole proprietors) are not exempt from backup withholding.
- Except as provided below, corporations are exempt from backup withholding for certain payments, including interest and dividends.
- Corporations are not exempt from backup withholding for payments made in settlement of payment card or third party network transactions.
- Corporations are not exempt from backup withholding with respect to attorneys' fees or gross proceeds paid to attorneys, and corporations that provide medical or health care services are not exempt with respect to payments reportable on Form 1099-MISC.

The following codes identify payees that are exempt from backup withholding. Enter the appropriate code in the space in line 4.

1—An organization exempt from tax under section 501(a), any IRA, or a custodial account under section 403(b)(7) if the account satisfies the requirements of section 401(f)(2)

2—The United States or any of its agencies or instrumentalities

3—A state, the District of Columbia, a U.S. commonwealth or possession, or any of their political subdivisions or instrumentalities

4—A foreign government or any of its political subdivisions, agencies, or instrumentalities

5—A corporation

6—A dealer in securities or commodities required to register in the United States, the District of Columbia, or a U.S. commonwealth or possession

7—A futures commission merchant registered with the Commodity Futures Trading Commission

8—A real estate investment trust

9—An entity registered at all times during the tax year under the Investment Company Act of 1940

10—A common trust fund operated by a bank under section 584(a)

11—A financial institution

12—A middleman known in the investment community as a nominee or custodian

13—A trust exempt from tax under section 664 or described in section 4947

The following chart shows types of payments that may be exempt from backup withholding. The chart applies to the exempt payees listed above, 1 through 13.

IF the payment is for . . .	THEN the payment is exempt for . . .
Interest and dividend payments	All exempt payees except for 7
Broker transactions	Exempt payees 1 through 4 and 6 through 11 and all C corporations. S corporations must not enter an exempt payee code because they are exempt only for sales of noncovered securities acquired prior to 2012.
Barter exchange transactions and patronage dividends	Exempt payees 1 through 4
Payments over $600 required to be reported and direct sales over $5,000[1]	Generally, exempt payees 1 through 5[2]
Payments made in settlement of payment card or third party network transactions	Exempt payees 1 through 4

[1] See Form 1099-MISC, Miscellaneous Income, and its instructions.

[2] However, the following payments made to a corporation and reportable on Form 1099-MISC are not exempt from backup withholding: medical and health care payments, attorneys' fees, gross proceeds paid to an attorney reportable under section 6045(f), and payments for services paid by a federal executive agency.

Exemption from FATCA reporting code. The following codes identify payees that are exempt from reporting under FATCA. These codes apply to persons submitting this form for accounts maintained outside of the United States by certain foreign financial institutions. Therefore, if you are only submitting this form for an account you hold in the United States, you may leave this field blank. Consult with the person requesting this form if you are uncertain if the financial institution is subject to these requirements. A requester may indicate that a code is not required by providing you with a Form W-9 with "Not Applicable" (or any similar indication) written or printed on the line for a FATCA exemption code.

A—An organization exempt from tax under section 501(a) or any individual retirement plan as defined in section 7701(a)(37)

B—The United States or any of its agencies or instrumentalities

C—A state, the District of Columbia, a U.S. commonwealth or possession, or any of their political subdivisions or instrumentalities

D—A corporation the stock of which is regularly traded on one or more established securities markets, as described in Regulations section 1.1472-1(c)(1)(i)

E—A corporation that is a member of the same expanded affiliated group as a corporation described in Regulations section 1.1472-1(c)(1)(i)

F—A dealer in securities, commodities, or derivative financial instruments (including notional principal contracts, futures, forwards, and options) that is registered as such under the laws of the United States or any state

G—A real estate investment trust

H—A regulated investment company as defined in section 851 or an entity registered at all times during the tax year under the Investment Company Act of 1940

I—A common trust fund as defined in section 584(a)

J—A bank as defined in section 581

K—A broker

L—A trust exempt from tax under section 664 or described in section 4947(a)(1)

M—A tax exempt trust under a section 403(b) plan or section 457(g) plan

Note. You may wish to consult with the financial institution requesting this form to determine whether the FATCA code and/or exempt payee code should be completed.

Line 5

Enter your address (number, street, and apartment or suite number). This is where the requester of this Form W-9 will mail your information returns.

Line 6

Enter your city, state, and ZIP code.

Part I. Taxpayer Identification Number (TIN)

Enter your TIN in the appropriate box. If you are a resident alien and you do not have and are not eligible to get an SSN, your TIN is your IRS individual taxpayer identification number (ITIN). Enter it in the social security number box. If you do not have an ITIN, see *How to get a TIN* below.

If you are a sole proprietor and you have an EIN, you may enter either your SSN or EIN. However, the IRS prefers that you use your SSN.

If you are a single-member LLC that is disregarded as an entity separate from its owner (see *Limited Liability Company (LLC)* on this page), enter the owner's SSN (or EIN, if the owner has one). Do not enter the disregarded entity's EIN. If the LLC is classified as a corporation or partnership, enter the entity's EIN.

Note. See the chart on page 4 for further clarification of name and TIN combinations.

How to get a TIN. If you do not have a TIN, apply for one immediately. To apply for an SSN, get Form SS-5, Application for a Social Security Card, from your local SSA office or get this form online at *www.ssa.gov*. You may also get this form by calling 1-800-772-1213. Use Form W-7, Application for IRS Individual Taxpayer Identification Number, to apply for an ITIN, or Form SS-4, Application for Employer Identification Number, to apply for an EIN. You can apply for an EIN online by accessing the IRS website at *www.irs.gov/businesses* and clicking on Employer Identification Number (EIN) under Starting a Business. You can get Forms W-7 and SS-4 from the IRS by visiting IRS.gov or by calling 1-800-TAX-FORM (1-800-829-3676).

If you are asked to complete Form W-9 but do not have a TIN, apply for a TIN and write "Applied For" in the space for the TIN, sign and date the form, and give it to the requester. For interest and dividend payments, and certain payments made with respect to readily tradable instruments, generally you will have 60 days to get a TIN and give it to the requester before you are subject to backup withholding on payments. The 60-day rule does not apply to other types of payments. You will be subject to backup withholding on all such payments until you provide your TIN to the requester.

Note. Entering "Applied For" means that you have already applied for a TIN or that you intend to apply for one soon.

Caution: *A disregarded U.S. entity that has a foreign owner must use the appropriate Form W-8.*

Part II. Certification

To establish to the withholding agent that you are a U.S. person, or resident alien, sign Form W-9. You may be requested to sign by the withholding agent even if items 1, 4, or 5 below indicate otherwise.

For a joint account, only the person whose TIN is shown in Part I should sign (when required). In the case of a disregarded entity, the person identified on line 1 must sign. Exempt payees, see *Exempt payee code* earlier.

Signature requirements. Complete the certification as indicated in items 1 through 5 below.

1. Interest, dividend, and barter exchange accounts opened before 1984 and broker accounts considered active during 1983. You must give your correct TIN, but you do not have to sign the certification.

2. Interest, dividend, broker, and barter exchange accounts opened after 1983 and broker accounts considered inactive during 1983. You must sign the certification or backup withholding will apply. If you are subject to backup withholding and you are merely providing your correct TIN to the requester, you must cross out item 2 in the certification before signing the form.

3. Real estate transactions. You must sign the certification. You may cross out item 2 of the certification.

4. Other payments. You must give your correct TIN, but you do not have to sign the certification unless you have been notified that you have previously given an incorrect TIN. "Other payments" include payments made in the course of the requester's trade or business for rents, royalties, goods (other than bills for merchandise), medical and health care services (including payments to corporations), payments to a nonemployee for services, payments made in settlement of payment card and third party network transactions, payments to certain fishing boat crew members and fishermen, and gross proceeds paid to attorneys (including payments to corporations).

5. Mortgage interest paid by you, acquisition or abandonment of secured property, cancellation of debt, qualified tuition program payments (under section 529), IRA, Coverdell ESA, Archer MSA or HSA contributions or distributions, and pension distributions. You must give your correct TIN, but you do not have to sign the certification.

What Name and Number To Give the Requester

For this type of account:	Give name and SSN of:
1. Individual	The individual
2. Two or more individuals (joint account)	The actual owner of the account or, if combined funds, the first individual on the account[1]
3. Custodian account of a minor (Uniform Gift to Minors Act)	The minor[2]
4. a. The usual revocable savings trust (grantor is also trustee)	The grantor-trustee[1]
b. So-called trust account that is not a legal or valid trust under state law	The actual owner[1]
5. Sole proprietorship or disregarded entity owned by an individual	The owner[3]
6. Grantor trust filing under Optional Form 1099 Filing Method 1 (see Regulations section 1.671-4(b)(2)(i)(A))	The grantor*
For this type of account:	**Give name and EIN of:**
7. Disregarded entity not owned by an individual	The owner
8. A valid trust, estate, or pension trust	Legal entity[4]
9. Corporation or LLC electing corporate status on Form 8832 or Form 2553	The corporation
10. Association, club, religious, charitable, educational, or other tax-exempt organization	The organization
11. Partnership or multi-member LLC	The partnership
12. A broker or registered nominee	The broker or nominee
13. Account with the Department of Agriculture in the name of a public entity (such as a state or local government, school district, or prison) that receives agricultural program payments	The public entity
14. Grantor trust filing under the Form 1041 Filing Method or the Optional Form 1099 Filing Method 2 (see Regulations section 1.671-4(b)(2)(i)(B))	The trust

[1] List first and circle the name of the person whose number you furnish. If only one person on a joint account has an SSN, that person's number must be furnished.

[2] Circle the minor's name and furnish the minor's SSN.

[3] You must show your individual name and you may also enter your business or DBA name on the "Business name/disregarded entity" name line. You may use either your SSN or EIN (if you have one), but the IRS encourages you to use your SSN.

[4] List first and circle the name of the trust, estate, or pension trust. (Do not furnish the TIN of the personal representative or trustee unless the legal entity itself is not designated in the account title.) Also see *Special rules for partnerships* on page 2.

***Note.** Grantor also must provide a Form W-9 to trustee of trust.

Note. If no name is circled when more than one name is listed, the number will be considered to be that of the first name listed.

Secure Your Tax Records from Identity Theft

Identity theft occurs when someone uses your personal information such as your name, SSN, or other identifying information, without your permission, to commit fraud or other crimes. An identity thief may use your SSN to get a job or may file a tax return using your SSN to receive a refund.

To reduce your risk:

- Protect your SSN,
- Ensure your employer is protecting your SSN, and
- Be careful when choosing a tax preparer.

If your tax records are affected by identity theft and you receive a notice from the IRS, respond right away to the name and phone number printed on the IRS notice or letter.

If your tax records are not currently affected by identity theft but you think you are at risk due to a lost or stolen purse or wallet, questionable credit card activity or credit report, contact the IRS Identity Theft Hotline at 1-800-908-4490 or submit Form 14039.

For more information, see Publication 4535, Identity Theft Prevention and Victim Assistance.

Victims of identity theft who are experiencing economic harm or a system problem, or are seeking help in resolving tax problems that have not been resolved through normal channels, may be eligible for Taxpayer Advocate Service (TAS) assistance. You can reach TAS by calling the TAS toll-free case intake line at 1-877-777-4778 or TTY/TDD 1-800-829-4059.

Protect yourself from suspicious emails or phishing schemes. Phishing is the creation and use of email and websites designed to mimic legitimate business emails and websites. The most common act is sending an email to a user falsely claiming to be an established legitimate enterprise in an attempt to scam the user into surrendering private information that will be used for identity theft.

The IRS does not initiate contacts with taxpayers via emails. Also, the IRS does not request personal detailed information through email or ask taxpayers for the PIN numbers, passwords, or similar secret access information for their credit card, bank, or other financial accounts.

If you receive an unsolicited email claiming to be from the IRS, forward this message to *phishing@irs.gov.* You may also report misuse of the IRS name, logo, or other IRS property to the Treasury Inspector General for Tax Administration (TIGTA) at 1-800-366-4484. You can forward suspicious emails to the Federal Trade Commission at: *spam@uce.gov* or contact them at *www.ftc.gov/idtheft* or 1-877-IDTHEFT (1-877-438-4338).

Visit IRS.gov to learn more about identity theft and how to reduce your risk.

Privacy Act Notice

Section 6109 of the Internal Revenue Code requires you to provide your correct TIN to persons (including federal agencies) who are required to file information returns with the IRS to report interest, dividends, or certain other income paid to you; mortgage interest you paid; the acquisition or abandonment of secured property; the cancellation of debt; or contributions you made to an IRA, Archer MSA, or HSA. The person collecting this form uses the information on the form to file information returns with the IRS, reporting the above information. Routine uses of this information include giving it to the Department of Justice for civil and criminal litigation and to cities, states, the District of Columbia, and U.S. commonwealths and possessions for use in administering their laws. The information also may be disclosed to other countries under a treaty, to federal and state agencies to enforce civil and criminal laws, or to federal law enforcement and intelligence agencies to combat terrorism. You must provide your TIN whether or not you are required to file a tax return. Under section 3406, payers must generally withhold a percentage of taxable interest, dividend, and certain other payments to a payee who does not give a TIN to the payer. Certain penalties may also apply for providing false or fraudulent information.

Job No.: _____

TAX FORM/DEBT/ RESIDENCE CERTIFICATION
(for Advertised Projects)

Taxpayer Identification Number (T.I.N.): _____

Company Name submitting Bid/Proposal: _____

Mailing Address: _____

Are you registered to do business in the State of Texas? Yes No

If you are an individual, list the names and addresses of any partnership of which you are a general partner or any assumed name(s) under which you operate your business

_____

_____

I. **Property:** List all taxable property in Fort Bend County owned by you or above partnerships as well as any d/b/a names. Include real and personal property as well as mineral interest accounts. (Use a second sheet of paper if necessary.)

Fort Bend County Tax Acct. No.*	Property address or location**
_____	_____
_____	_____
_____	_____
_____	_____

** This is the property account identification number assigned by the Fort Bend County Appraisal District.*
*** For real property, specify the property address or legal description. For business personal property, specify the address where the property is located. For example, office equipment will normally be at your office, but inventory may be stored at a warehouse or other location.*

II. **Fort Bend County Debt** - Do you owe any debts to Fort Bend County (taxes on properties listed in I above, tickets, fines, tolls, court judgments, etc.)?

Yes No If yes, attach a separate page explaining the debt.

III. **Residence Certification** - Pursuant to Texas Government Code §2252.001 *et seq.*, as amended, Fort Bend County requests Residence Certification. §2252.001 *et seq.* of the Government Code provides some restrictions on the awarding of governmental contracts; pertinent provisions of §2252.001 are stated below:

(3) "Nonresident bidder" refers to a person who is not a resident.

(4) "Resident bidder" refers to a person whose principal place of business is in this state, including a contractor whose ultimate parent company or majority owner has its principal place of business in this state.

I certify that _____ is a Resident Bidder of Texas as defined in Government Code
[Company Name]
§2252.001.

I certify that _____ is a Nonresident Bidder as defined in Government Code
[Company Name]
§2252.001 and our principal place of business is _____.
[City and State]

Mandatory Form

Contractor Acknowledgement of Storm Water Management Program

I hereby acknowledge that I am aware of the stormwater management program and standard operating procedures developed by Fort Bend County in compliance with the TPDES General Permit No. TXR040000. I agree to comply with all applicable best management practices and standard operating procedures while conducting my services for Fort Bend County. I agree to conduct all services in a manner that does not introduce illicit discharges of pollutants to streets, stormwater inlets, drainage ditches or any portion of the drainage system. The following materials and/or pollutant sources must not be discharged to the drainage system as a result of any services provided:

1. Grass clippings, leaves, mulch, rocks, sand, dirt or other waste materials resulting from landscaping activities, (except those materials resulting from ditch mowing or maintenance activities)
2. Herbicides, pesticides and/or fertilizers, (except those intended for aquatic use)
3. Detergents, fuels, solvents, oils and/or lubricants, other equipment and/or vehicle fluids,
4. Other hazardous materials including paints, thinners, chemicals or related waste materials,
5. Uncontrolled dewatering discharges, equipment and/or vehicle wash waters,
6. Sanitary waste, trash, debris, or other waste products
7. Wastewater from wet saw machinery,
8. Other pollutants that degrade water quality or pose a threat to human health or the environment.

Furthermore, I agree to notify Fort Bend County immediately of any issue caused by or identified by:

_____
(Company/Contractor)

that is believed to be an immediate threat to human health or the environment.

_____ _____
Contractor Signature Date

_____
Printed Name

_____
Title

Table of Contents

I. List of Technical Specifications

II. Bid Forms

III. Summary of Work

IV. Utility Adjustment Summary

V. Geotechnical Report

INDEX OF TECHNICAL SPECIFICATIONS

Harris County Specifications

Reference Harris County Standard Engineering Design Specifications (2017 revision) where applicable.

Spec No.	Specification Title
102	Clearing and Grubbing
104	Remove Old Concrete
110	Roadway Excavation
162	Sodding for Erosion Control and Stabilization
165	Hydro-Mulch Seeding (for Erosion Control and Stabilization)
429	Trench Safety System
460	Reinforced Concrete Pipe
472	Inlets
495	Removing Old Structures
500	Remove and Relocate or Dispose of Traffic Signs, Mail Boxes and Roadway Signs
530	Concrete Curb, Concrete Curb and Gutter, Sidewalks and Driveways
535	Medians and Directional Islands
624	Aluminum Signs
660	Reflectorized Pavement Markings
663	Traffic Buttons and Pavement Markers
671	Traffic Control
672	Flagmen
700	Notice of Intent
741	Inlet Protection Barrier (for Stage II Inlets, Gravel Bags)
751	SWPPP Inspection and Maintenance

Texas Department of Transportation Standard Specifications

Reference Texas Department of Transportation Standard Specifications for Construction of Highways, Streets and Bridges (2014 revision) where applicable when identified in the Bid Form specification reference as "TxDOT"

Spec No.	Specification Title
360	Concrete Pavement
690	Maintenance of Traffic Signals
6027	Preparation of Existing Conduits, Ground Boxes, or Manholes

Summary of Work – W Bellfort Road Right Turn Lane onto SH 99 (Grand Parkway) NB Frontage Road

The scope of work for the above project includes removal of existing concrete pavement, curb, driveway, pedestrian ramps, pedestrian pole, roadway signs and pavement markings.

The scope includes proposing a 12' right turn lane from westbound W Bellfort Road to SH 99 (Grand Parkway) northbound frontage road. The proposed roadway section is composed of 13" fast track concrete pavement.

The scope includes the installation of 24" reinforced concrete pipes and Type C and Type C-2 inlets.

The scope also includes the installation of type 7 pedestrian ramps, sidewalk, median adjustment, and modification of the existing signal on the northeast corner to include additional pedestrian push buttons and pedestrian signal heads.

Traffic Control, permanent signing and striping, and storm water pollution prevention is also included as part of the scope for this project.

Contractor to ensure he or she is familiar with the Utility Summary Package included in the project manual. The Utility Summary Package includes information on contact personnel regarding the various utilities to remain.

W Bellfort Road Right Turn Lane onto SH 99 (Grand Parkway) NB Frontage Road

FBC 20403

Utility Adjustment Summary

1. **AT&T:** Fort Bend County has received a LONO from AT&T. No conflicts are anticipated with the proposed construction and AT&T underground lines.

2. **CenterPoint Electric:** Fort Bend County has received a LONO from CenterPoint. No conflicts are anticipated with the proposed construction with CenterPoint distribution power poles.

3. **CenterPoint Gas:** Fort Bend County has received a LONO from CenterPoint. No conflicts are anticipated with the proposed construction and CenterPoint gas lines. CenterPoint has two gas valves located within the limits of the proposed sidewalk. The valve stacks can be adjusted and match the sidewalk elevation when the County Contractor has placed the forms for the sidewalk. CNP district office to assist the County contractor with adjustment of the existing valve stacks. Please see below the CNP District contact information:

   Bryan Lynn
   Gas Operations Supervisor, Richmond District
   bryan.lynn@centerpointenergy.com
   Phone number: 777-800-1905

4. **Comcast:** Fort Bend County has received a LONO from Comcast. Comcast does not have underground utilities in the location of the proposed construction. Comcast has aerial lines within the limits of the proposed construction however these lines are not expected to be relocated.

5. **Consolidated Communications:** Fort Bend County has received a LONO from Consolidated Communications. Consolidated does not have underground utilities in the location of the proposed construction.

6. **Crown Castle:** Fort Bend County has received a LONO from Crown Castle. Crown Castle does not have underground utilities in the location of the proposed construction.

7. **Entouch Systems:** Fort Bend County has received a LONO from Entouch. Entouch does not have underground utilities in the location of the proposed construction. Entouch has aerial lines within the limits of the proposed construction however these lines are not expected to be relocated.

8. **MUD 194:** Fort Bend County has received a LONO from MUD 194. No conflicts are anticipated with the proposed construction and MUD 194 facilities.

9. **North Fort Bend Water Authority (NFBWA):** Fort Bend County has received a LONO from the NFBWA. The existing water line is outside the proposed project work area therefore no conflicts are anticipated with the proposed construction and NFBWA facilities.

10. **Phonoscope:** Fort Bend County has received a LONO from Phonoscope. Phonoscope does not have any facilities in the location of the proposed construction.

Ninyo & Moore
Geotechnical & Environmental Sciences Consultants

August 13, 2021
Project No. 701199001

Mr. Mahmoud Salehi, PE
CobbFendley
22316 Grand Corner Drive, Suite 100
Katy, Texas 77494

Subject: Geotechnical Evaluation
West Bellfort Avenue Right Turn Lane
Grand Parkway and West Bellfort Avenue
Richmond, Texas

Dear Mr. Salehi:

In accordance with our proposal dated May 4, 2021 and your authorization on July 13, 2021, we have performed a geotechnical evaluation for the above referenced site. This letter report presents our methodology, findings, geotechnical considerations, and recommendations for design and construction of the of the new right turn lane.

SITE AND PROJECT DESCRIPTION

The project consists of the design and construction of a new, approximately 500-foot-long right turning lane on West Bellfort Avenue at the intersection with Grand Parkway. The new lane will match the existing pavement thickness of West Bellfort Avenue. In addition, a new storm sewer will be installed along this alignment with an invert depth of on the order of 5 feet below the existing ground surface.

At the time of our evaluation, the project alignment was a grassy area. The alignment is paralleled to the south by the existing lanes of West Bellfort Street and to the north by undeveloped, vacant land.

SCOPE OF SERVICES

Our scope of services included the following:

- Performing a site visit to mark out the proposed boring location and notifying Texas811 of the boring location prior to drilling.
- Drilling, logging and sampling two exploratory soil boring to a depth of about 10 feet below the existing ground surface (bgs).

- Performing laboratory tests on selected samples obtained from our boring to evaluate the in-situ moisture content, percent finer than No. 200 sieve, Atterberg limits, and shear strength.
- Compiling the collected data and performing engineering analyses.
- Preparing an engineering letter report presenting our findings, considerations, and recommendations regarding the design and construction of the project.

Our scope of services did not include environmental consulting services such as hazardous waste sampling or analytical testing at the site. In addition, a fault study was beyond the scope of this study. If needed, a scope and fee for these services can be provided.

FIELD EXPLORATION

On July 26, 2021, Ninyo & Moore performed a subsurface exploration at the site to evaluate the subsurface conditions and collect soil samples for laboratory testing. Our evaluation consisted of drilling, logging, and sampling two exploratory soil borings, designated B-1 and B-2 (Figure 2). The borings were drilled to depths of approximately 10 feet bgs using a drill rig mounted on a truck and equipped with straight-flight augers.

Soil samples were collected at selected intervals and were logged in general accordance with American Society of Testing Materials (ASTM) standard D2488. The soil samples collected from our drilling activities were transported to our laboratory for geotechnical laboratory testing. Relatively undisturbed soil samples were collected at regular intervals by hydraulically pushing Shelby tube samplers. A pocket penetrometer was used to approximate the unconfined compressive strength as an indicator of soil consistency for intact cohesive samples. The boring was backfilled with drilling cuttings on conclusion of our fieldwork.

Brief descriptions of field sampling procedures used are presented on Figure A-1, Explanation of Field Sampling Procedures, in Appendix A. Descriptions of the soils encountered in our borings are presented on boring logs in Appendix A.

LABORATORY TESTING

The soil samples collected from our drilling activities were visually classified and tested in our laboratory to evaluate their engineering properties as a basis for providing geotechnical recommendations for design and construction considerations. Laboratory testing included natural moisture contents (ASTM D2216), Atterberg limits (ASTM D4318 Method B), and percent of particles finer than the No. 200 sieve (ASTM D1140).

Brief descriptions of laboratory test procedures used are presented on Figure B-1, Methods of Laboratory Testing, in Appendix B. Individual test results are presented on the boring log and/or on summaries of test results on Figures B-2 through B-4 in Appendix B.

SUBSURFACE CONDITIONS

Our understanding of the subsurface conditions at the project site is based on the results of our field exploration, laboratory tests, and our experience. More detailed stratigraphic information is presented on the boring logs in Appendix A. The boring logs contain our field and laboratory test results, as well as our interpretation of conditions believed to exist between actual samples retrieved. Therefore, the boring logs contain both factual and interpretive information. Lines delineating subsurface strata on the boring logs are intended to group soils having similar engineering properties and characteristics. They should be considered approximate, as the actual transition between soil types (strata) may be gradual. A key to the soil symbols and terms used on the boring logs is provided in Appendix A.

Existing Fill Soils

Fill soils were encountered at the surface of Boring B-1 to a depth of about 1-foot bgs. The fill generally consisted of fat clays (CH) with varying sand fractions.

Beaumont Formation

Naturally-deposited soils from the Beaumont Formation were encountered underlying the fill soils in Boring B-1, and at the ground surface of Boring B-2, and extended to the boring termination depth of about 10 feet bgs. In general, the soils in our borings consisted of fat clays (CH).

DEPTH-TO-WATER

The borings were drilled using dry-auger techniques in an attempt to measure depth-to-water in the open boreholes. Free water was not encountered in the borings during or on conclusion of the drilling operations.

Fluctuations in groundwater generally occur as a function of seasonal moisture variation, temperature, and groundwater withdrawal. Future construction activities may alter the surface and subsurface drainage characteristics of this site. In addition, perched groundwater may be encountered at the site, particularly after periods of heavy precipitation.

GEOTECHNICAL CONSIDERATIONS

Based on the results of our subsurface evaluation, laboratory testing, and data analyses, the proposed construction is feasible from a geotechnical standpoint provided the recommendations in this report are incorporated into the design and construction of the project. Geotechnical considerations include the following:

- Due to the widely spaced nature of our soil borings, soil conditions that differ from what were encountered in our borings may be encountered during construction.
- The onsite soils should generally be excavatable to the anticipated earthwork depths with conventional earthmoving equipment.
- The near surface clayey soils are sensitive to moisture and earthwork contractors may encounter compaction difficulties, particularly when these soils are wet.
- Free water was not observed in our borings during or on conclusion of the drilling activities. However, shallow groundwater and/or perched groundwater may be encountered during construction, particularly after periods of heavy precipitation.
- Many of the onsite soils will likely be suitable for re-use as general fill for grading and utility trench backfill, provided they are free of deleterious materials.

RECOMMENDATIONS

The following sections present our geotechnical recommendations and were developed based on our understanding of the proposed construction, the observed subsurface conditions, and our experience. If the proposed construction is changed from that discussed herein or subsurface conditions other than those shown on the Boring Logs (Appendix A) are observed at the time of construction, Ninyo & Moore should be retained to review the new information and evaluate the need for additional recommendations.

Earthwork

The following sections present our earthwork recommendations for this project. In general, Fort Bend County construction standards and specifications are expected to apply, unless otherwise noted.

Existing Fill

As discussed above, fill was observed in Boring B-1 to a depth of approximately 1-foot bgs. In practice, it is relatively difficult to accurately delineate fill soils that are visually similar to the native soils. Therefore, the recorded fill depths should be considered estimates and may vary somewhat from the actual fill depths.

We recommend the existing fill be completely excavated and the subgrade proofrolled. Excavated fill soils free of shells organic matter and/or deleterious materials should then be moisture conditioned and replaced under engineering supervision.

Site Preparation

Following removal of the fill soils, the exposed subgrade should be proofrolled. Proofrolling should be accomplished using a pneumatic-tired roller, dump truck, or similar equipment weighing approximately 20 tons and observed by the Geotechnical Engineer-of-Record or the Engineer's designated representative.

Excavated fill materials that are free of organic matter and/or deleterious materials may be placed again as general fill, as outlined under the Fill Materials and Compaction section below.

Due to the nature of the surficial soils, traffic of heavy equipment (including heavy compaction equipment) may create pumping and general deterioration of shallow soils. Therefore, some construction difficulties should be anticipated, especially during periods when these soils are saturated.

Excavations

Our evaluation of the excavation characteristics of the onsite materials is based on the results of our exploratory boring, site observations, and experience with similar materials. Due to the heterogeneous nature of the project area soils, soils different than those encountered in our boring should be anticipated during construction.

In our opinion, excavations at this site may be performed using conventional heavy-duty earthmoving or excavation equipment. Equipment and procedures should be used that do not cause significant disturbance to the excavation bottoms. The bottoms of excavations should expose competent soils and should be dry and free of loose, soft, or disturbed soil. Any soft, wet, weak, or deleterious materials should be overexcavated to expose strong competent soils.

Groundwater was not observed in our borings during or on conclusion of the drilling activities. The Contractor may encounter relatively shallow groundwater and/or perched water during construction, particularly after periods of precipitation. This may result in difficulty achieving compaction of the soil, as well as subgrade pumping, etc., during earthwork activities. Wet or saturated soils at the excavation bases may soften under the action of light equipment and foot traffic. Drying or overexcavation of these materials may be appropriate prior to filling. If the subgrade becomes disturbed, it should be compacted before placing the backfill material.

Contractors should provide safely sloped excavations or an adequately constructed and braced shoring system in compliance with Occupational Safety and Health Administration (OSHA) Regulations. Based on the soil conditions at the site, we recommend that an OSHA "Type B" soil classification be used for planning purposes for excavations in clays at the site to 20 feet bgs or less. This corresponds to temporary slopes of 1:1 (horizontal: vertical) for excavations that are less than 20 feet deep. However, if groundwater seepage and/or granular soils are encountered, an OSHA Soil "Type C" classification should be used. This corresponds to temporary slopes of 1.5:1 (horizontal: vertical). Upon excavation, soil classifications should be evaluated in the field by the Contractor's geotechnical consultant in accordance with OSHA regulations. Excavations more than 20 feet deep should be designed by the Contractor's engineer based on a site specific geotechnical analysis and evaluation of settlement-sensitive features.

Flatter slopes or bracing may be needed if excessive sloughing or raveling is observed. If material is stored or equipment is operated near an excavation, flatter slopes or stronger shoring should be used to resist the extra pressure due to superimposed loads.

Temporary Shoring

It may be preferable to shore or brace trenches or bore pits in lieu of sloping back the sides, particularly in areas in close proximity to adjacent roadways and existing underground utilities. Temporary earth retention systems may include braced systems, such as trench boxes or shields with internal supports, or cantilever systems (e.g., soldier piles and lagging).

Trench boxes may be used within relatively shallow excavations; however, trench boxes may not be a viable alternative for relatively deep excavations. In addition, due to the presence of loose, non-cohesive soils and shallow groundwater, excavations may not stand open long enough to install the trench boxes in these areas. The Contractor should be prepared to deal with these soil conditions and plan accordingly.

Because the walls of trench box are generally not in intimate contact with the trench side walls, lateral movement along the trench excavation should be anticipated. Trench boxes with walls that hydraulically expand and come into intimate contact with excavation side walls should reduce lateral movement but may still result in some shifting of the adjacent soil. Once installed, some sloughing is possible at the ends of the trench box; therefore, any loose material should be removed prior to backfilling of the excavation.

We anticipate that settlement of the ground surface may occur behind shoring systems during excavation due to lateral movement of the retained material. Such movement will depend on the

type and relative stiffness of the system used and other factors beyond the scope of this study. We recommend that existing utilities, pavements, and structures in the vicinity of the planned excavation be evaluated prior to construction with regard to their ability to withstand anticipated horizontal and vertical movements associated with a shored excavation. The contractor's engineer should perform a deflection analysis for the proposed shoring system. If movements exceed the tolerance of existing project features (utilities, pavements, structures, etc.), alternative shoring systems employing the at-rest earth pressure, tiebacks, dead-man anchors, or cross bracing may be needed to reduce deflections to acceptable levels.

Possible causes of settlement that should be addressed include excavation, traffic and construction vibrations, dewatering, and removal of the shoring system. We recommend that shoring installation be evaluated carefully by the contractor prior to construction and that ground vibration and settlement monitoring be performed during construction.

The contractor should retain a qualified and experienced structural engineer to design any shoring system. The contractor's engineer should evaluate the adequacy of the shoring based on the soil parameters presented in this report and make appropriate modifications to their design.

Pipe Bedding and Trench Backfill

Pipe bedding and trench backfill materials should be placed in general accordance with Fort Bend County Specifications. Pipe bedding, and backfill material within the pipe zone, should consist of Cement Stabilized Sand (CSS).

Trenches in pavement areas (including public or private roads, streets or driveways) should be backfilled with CSS. The CSS should be placed in general accordance with Fort Bend County Specifications. The CSS should generally be placed in 8-inch-thick loose lifts such that each lift is firm and non-yielding under the weight of construction equipment. It should be compacted to 95 percent or more of the maximum dry density as determined by ASTM D558, Standard Test Methods for Moisture-Density (Unit Weight) Relations of Soil-Cement Mixtures.

Trench backfill more than 12 inches above the top of the pipe in non-roadway areas should be compacted as discussed in Fill Materials and Compaction section below. Lift thickness for backfill will be dependent upon the type of compaction equipment used, but should generally be placed in lifts not exceeding 8 inches in loose thickness. Care should be exercised to avoid damaging the pipe or other structures during the compaction of the backfill. Based on the results of our study, many of the onsite soils will be suitable for use as trench backfill within this zone.

Fill Materials and Compaction

Suitable fill should not include organic material, construction debris, or other non-soil fill materials. Clay lumps and rock particles should not be larger than 6 inches in dimension. This material should be disposed of offsite or in non-structural areas.

Fill materials in contact with ferrous metals should also have low corrosion potential (minimum resistivity more than 2,000 ohm-cm, chloride content less than 25 parts per million [ppm]). Fill material in contact with concrete should have a soluble sulfate content of less than 0.1 percent. The Geotechnical Engineer-of-Record should evaluate such materials and details of their placement prior to importation.

Fill soils, as well as scarified subgrade soils, should be moisture conditioned within the moisture range shown below in Table 1 and mechanically compacted to the percent compaction shown. Fill should generally be placed in 8-inch-thick loose lifts such that each lift is firm and non-yielding under the weight of construction equipment.

Table 1 – Summary of Compaction Recommendations

Description	Percent Compaction[1]	Moisture Content[2]
General Fill - Clay[3]	95 or more	-1% to +3%
Cement Stabilized Sand (CSS)	95 or more	-2% to +2%
Lime Treated Subgrade	95 or more	-1% to +3%

Note:
[1]Percent compaction is the ratio of compacted dry density to the maximum dry density per ASTM D698.
[2]The range shown refers to the optimum moisture content per ASTM D698.
[3]Clayey soils used as fill should be processed so that particles or clods are no more than 6 inches in diameter prior to compaction.

Site Drainage

Surface drainage should be provided to divert water away from and off of paved surfaces. Surface water should not be permitted to drain toward the pavement areas. Positive drainage is defined as a slope of 2 percent or more for a distance of 5 feet or more away from the pavements. Surface drainage should be provided to divert water away from and off of paved surfaces. Surface water should not be permitted to drain toward the pavement areas. Positive drainage is defined as a slope of 2 percent or more for a distance of 5 feet or more away from the pavements.

Pavement Subgrade Preparation

After finished subgrade elevation is achieved, the exposed surface of the pavement subgrade soils should be proofrolled in accordance with the Site Preparation Section above. Any soft or weak

areas observed during the proofrolling process should be removed and replaced with compacted material as outlined in the Fill Materials and Compaction section.

Following proofrolling, the exposed surface of the pavement subgrade soils should be scarified to a depth of 8 inches and chemically treated. We recommend treatment procedures extend 2 feet or more beyond the edge of the pavement to reduce effects of seasonal shrinking and swelling upon the edges of pavement.

Based on the borings performed for this study, the pavement subgrade will consist of cohesive soils (clays). Lime treatment should be used in areas where cohesive soils are exposed. Chemical treatment should consist of lime modification where cohesive soils are exposed.

Lime treatment for cohesive soils should be done in accordance with TxDOT Standard Specifications, Item 260. The soils should be mixed with a sufficient quantity of hydrated lime to reduce the soil-lime mixture plasticity index to 20 or less. If a PI of 20 is not achievable, sufficient lime should be added until the pH reaches a value of about 12.4 (or lime fixation). The soil and lime should be blended for the lime treatment to be effective. For estimating purposes, we recommend about 7 to 8 percent lime by dry soil weight be assumed.

The above recommendations are for design estimates only. We recommend the actual rate of application for the subgrade chemical (lime) treatment be determined by laboratory testing during construction.

Additional laboratory testing should be conducted prior to chemical treatment to evaluate the site for soluble sulfate content. The soluble sulfate content for the soils should be no more than 0.1 percent by weight.

Following the mixing activities, the chemically-treated soils should be compacted to 95 percent or more of the standard Proctor maximum dry density (ASTM D698) and within the range of 1 percent below to 3 percentage points above the material's optimum moisture content.

Pavement Recommendations

Our pavement analyses are based on our understanding that the subgrade preparation recommendations provided herein will be implemented at the time of construction. Based on the soils encountered in our borings and our experience in the project area, we recommend a design California Bearing Ratio (CBR) value of 3.0 and a correlating Resilient Modulus of 4,500 psi, be used for un-treated subgrade soils for this project.

We understand a traffic analysis was not performed for this project. Based on conversation with CobbFendley, a value of 2,000,000 ESALs was used for the design of the pavement section. The software program WinPAS, which is published by the American Concrete Pavement Association and is based on the 1993 edition of the AASHTO "Guide for the Design of Pavement Structures" was used for our analysis.

Based on our analysis, we recommend a pavement section of consisting of 8 inches or more of PCC, or match the existing thickness of the West Bellfort Avenue roadway, whichever is thicker. The pavement should be supported on chemically treated subgrade soils as discussed in the pavement subgrade section above.

Concrete pavements should have longitudinal and transverse joints as designed by the Civil Engineer. We recommend reinforcement for the concrete pavement areas be No. 4 reinforcing bars placed 18 inches on-center (each way) in the middle one-third of slab height. The Civil Engineer may decide that additional or reduced reinforcement is needed. Concrete pavement should include crack control, construction, and/or expansion joints as deemed appropriate by the Civil Engineer.

Concrete

The Civil Engineer should select the concrete design strength and the water-cement ratio based on the project specific loading conditions. We recommend the concrete have a ratio of water to cementitious materials no more than 0.50 by weight for normal weight aggregate concrete.

Laboratory chemical tests to evaluate the chloride and sulfate content of the site soils was not part of our scope for this project. We recommend the concentration of chloride and sulfate ions in soils in contact with concrete to be no more than 0.01% and 0.1% (by weight), respectively. If desired, laboratory chemical testing can be performed to estimate the sulfate content of the onsite soils.

Pre-Construction Conference

We recommend that a pre-construction conference be held. Representatives of the Owner, Civil Engineer, the Geotechnical Engineer, and the Contractor should be in attendance to discuss the project plans and schedule.

Construction Observation and Testing

During construction operations, we recommend that a qualified geotechnical consultant perform observation and testing services for the project. These services should be performed to evaluate exposed subgrade conditions, including the extent and depth of overexcavation, to evaluate the

suitability of proposed borrow materials for use as fill and to observe placement and test compaction of fill soils. If another geotechnical consultant is selected to perform observation and testing services for the project, we request that the selected consultant provide a letter to the Owner, with a copy to Ninyo & Moore, indicating that they fully understand our recommendations and that they are in full agreement with the recommendations contained in this report. Qualified subcontractors utilizing appropriate techniques and construction materials should perform construction of the proposed improvements.

We hope this provides you with the information you require at this time. We appreciate the opportunity to be of service to you during this phase of the project.

Sincerely,
NINYO & MOORE
TBPE Firm No. F-9782

Ronald A. Gutierrez
Graduate Engineer

Jeffrey S. Rodgers, PE, PG
Principal Engineer

STATE OF TEXAS
JEFFREY S. RODGERS
118726
LICENSED
PROFESSIONAL ENGINEER
8/13/2021

RAG/JSR/ls

TABLES

1 – Summary of Compaction Recommendations 8

FIGURES

1 – Site Location
2 – Boring Locations

APPENDICES

A – Boring Logs
B – Laboratory Testing

FIGURES

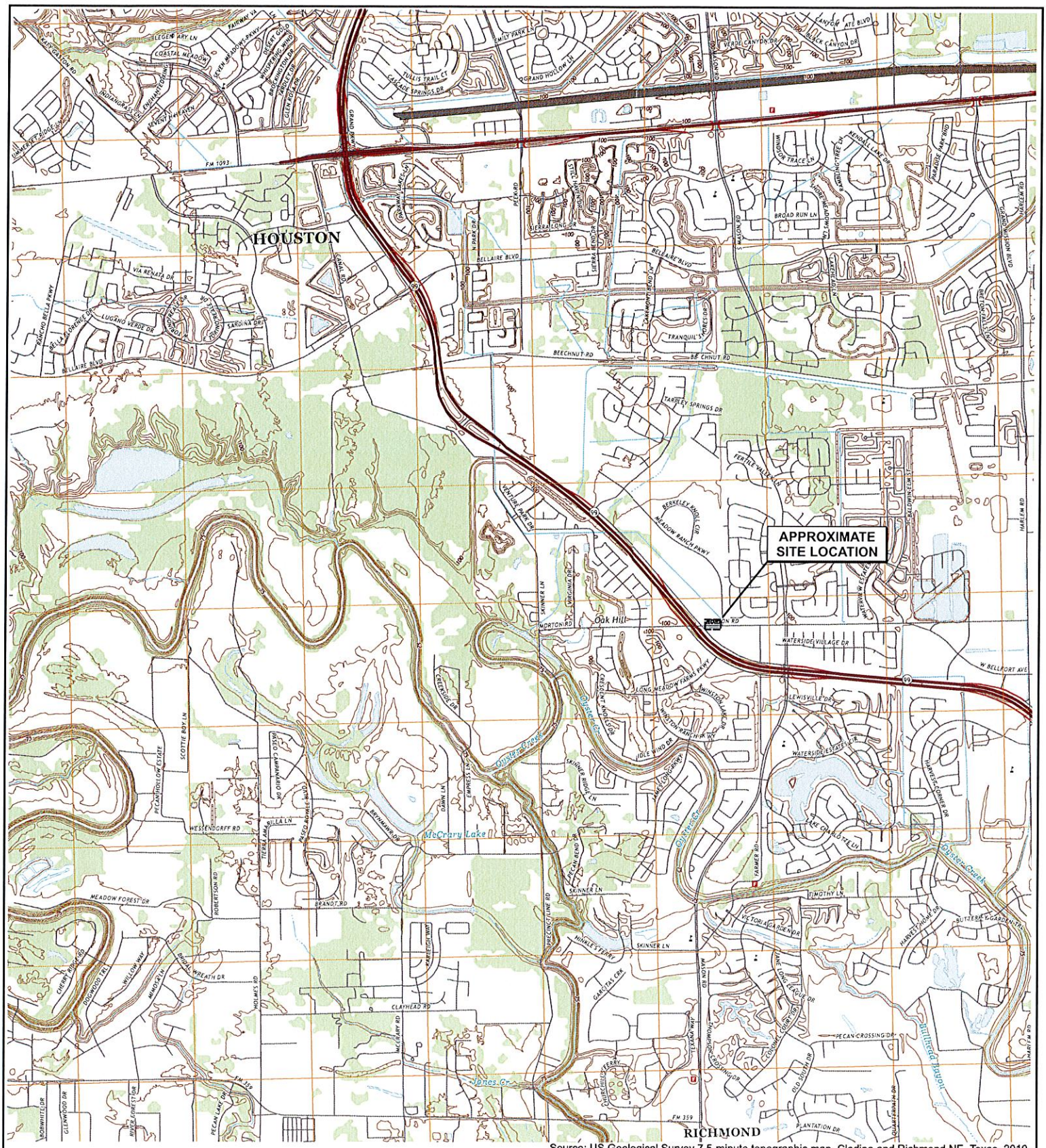

Source: US Geological Survey 7.5-minute topographic map, Clodine and Richmond NE, Texas, 2019.

NOTE: DIMENSIONS, DIRECTIONS AND LOCATIONS ARE APPROXIMATE.

FIGURE 1

SITE LOCATION

WEST BELLFORT AVENUE RIGHT TURN LANE
GRAND PARKWAY AND WEST BELLFORT AVENUE
RICHMOND, TEXAS

701199001 | 8/21

Ninyo & Moore
Geotechnical & Environmental Sciences Consultants

elt file no: 1199vmap0821

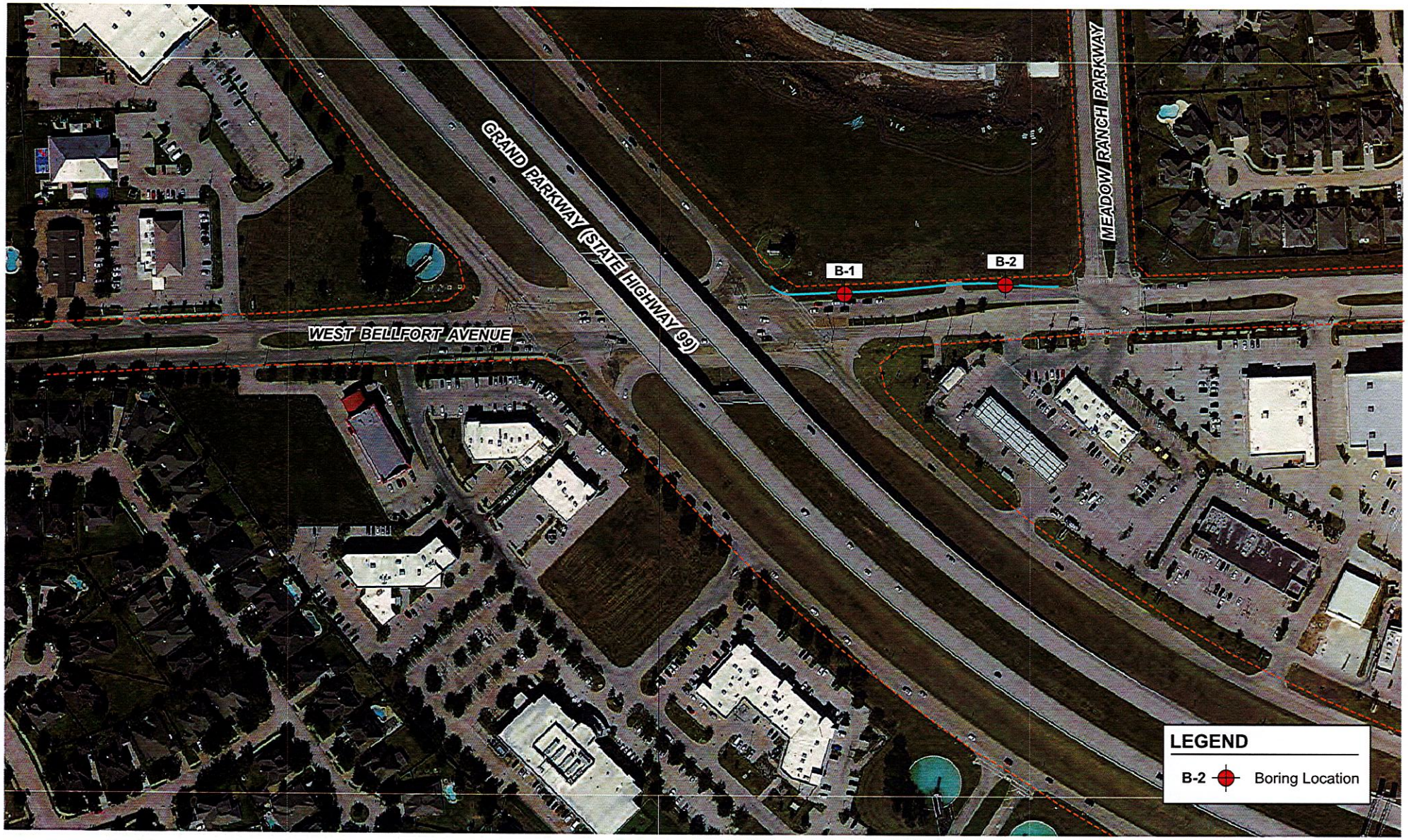

N

FEET

0 250

SOURCE: FORT BEND COUNTY 2020 MOBILITY BOND PROGRAM, 04/23/2021.
NOTE: DIMENSIONS, DIRECTIONS AND LOCATIONS ARE APPROXIMATE.

elt file no: 1199bim0821

Ninyo & Moore
Geotechnical & Environmental Sciences Consultants

FIGURE 2

BORING LOCATIONS

WEST BELLFORT AVENUE RIGHT TURN LANE
GRAND PARKWAY AND WEST BELLFORT AVENUE
RICHMOND, TEXAS

701199001 | 8/21

APPENDIX A

Boring Logs

FIGURE A-1

BORING LOGS

Field Procedure for the Collection of Relatively Undisturbed Samples

Relatively undisturbed soil samples were obtained in the field using the following method.

Shelby Tube

The Shelby tube is a seamless, thin-walled, steel tube having an external diameter of 3 inches and a length of 30 inches. The tube was connected to the drill rod or a hand tool and pushed into an undisturbed soil mass to obtain a relatively undisturbed sample of soft, cohesive soil in general accordance with ASTM D1587. When the tube was almost full (to avoid over-penetration), it was withdrawn from the boring. The samples were removed from the sampling tubes in the field, assessed visually, and evaluated for consistency using a pocket penetrometer. A selected portion of each sample was then wrapped in aluminum foil and sealed in a plastic bag for use in future visual assessment and possible testing in our laboratory.

Criteria for Assigning Group Symbols and Group Names Using Laboratory Tests[A]				Soil Classification: Group Symbol	Soil Classification: Group Name[B]
Coarse Grained Soils More than 50% retained on No. 200 sieve	Gravels More than 50% of coarse fraction retained on No. 4 sieve	Clean Gravels Less than 5% fines[C]	Cu ≥ 4 and 1 ≤ Cc ≤ 3[D]	GW	Well-graded gravel[E]
			Cu < 4 and/or [1 > Cc > 3][D]	GP	Poorly graded gravel[E]
		Gravels with Fines More than 12% fines[C]	Fines classify as ML or MH	GM	Silty gravel[E,F,G]
			Fines classify as CL or CH	GC	Clayey gravel[E,F,G]
	Sands 50% or more of coarse fraction passes No. 4 sieve	Clean Sands Less than 5% fines[H]	Cu ≥ 6 and 1 ≤ Cc ≤ 3[D]	SW	Well-graded sand[I]
			Cu < 6 and/or [1 > Cc > 3][D]	SP	Poorly graded sand[I]
		Sands with Fines More than 12% fines[H]	Fines classify as ML or MH	SM	Silty sand[F,G,H]
			Fines classify as CL or CH	SC	Clayey sand[F,G,H]
Fine-Grained Soils 50% or more passes the No. 200 sieve	Silts and Clays Liquid limit less than 50	Inorganic	PI > 7 and plots on or above "A" line[J]	CL	Lean clay[K,L,M]
			PI < 4 or plots below "A" line[J]	ML	Silt[K,L,M]
		Organic	Liquid limit - oven dried / Liquid limit - not dried < 0.75	OL	Organic clay[K,L,M,N]
					Organic silt[K,L,M,O]
	Silts and Clays Liquid limit 50 or more	Inorganic	PI plots on or above "A" line	CH	Fat clay[K,L,M]
			PI plots below "A" line	MH	Elastic Silt[K,L,M]
		Organic	Liquid limit - oven dried / Liquid limit - not dried < 0.75	OH	Organic clay[K,L,M,P]
					Organic silt[K,L,M,Q]
Highly organic soils	Primarily organic matter, dark in color, and organic odor			PT	Peat

[A]Based on the material passing the 3-in. (75-mm) sieve

[B]If field sample contained cobbles or boulders, or both, add "with cobbles or boulders, or both" to group name.

[C]Gravels with 5 to 12% fines require dual symbols: GW-GM well-graded gravel with silt, GW-GC well-graded gravel with clay, GP-GM poorly graded gravel with silt, GP-GC poorly graded gravel with clay.

[D]$Cu = D_{60}/D_{10}$ $Cc = (D_{30})^2 / (D_{10} \times D_{60})$

[E]If soil contains ≥ 15% sand, add "with sand" to group name.

[F]If fines classify as CL-ML, use dual symbol GC-GM, or SC-SM.

[G]If fines are organic, add "with organic fines" to group name.

[H]Sands with 5 to 12% fines require dual symbols: SW-SM well-graded sand with silt, SW-SC well-graded sand with clay, SP-SM poorly graded sand with silt, SP-SC poorly graded sand with clay

[I]If soil contains ≥ 15% gravel, add "with gravel" to group name.

[J]If Atterberg limits plot in shaded area, soil is a CL-ML, silty clay.

[K]If soil contains 15 to <30% plus No. 200, add "with sand" or "with gravel," whichever is predominant.

[L]If soil contains ≥ 30% plus No. 200 predominantly sand, add "sandy" to group name.

[M]If soil contains ≥ 30% plus No. 200, predominantly gravel, add "gravelly" to group name.

[N]PI ≥ 4 and plots on or above "A" line.

[O]PI < 4 or plots below "A" line.

[P]PI plots on or above "A" line.

[Q]PI plots below "A" line.

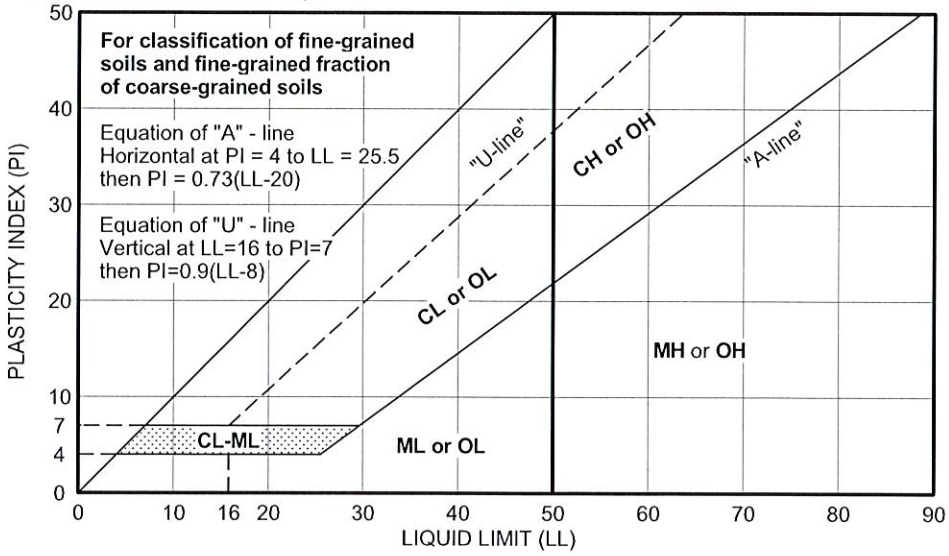

BASED ON TABLE 1 "SOIL CLASSIFICATION CHART" ASTM D 2487-11

FIGURE A-2

SOIL CLASSIFICATION CHART

WEST BELLFORT AVENUE RIGHT TURN LANE
GRAND PARKWAY AND WEST BELLFORT AVENUE
RICHMOND, TEXAS

Ninyo & Moore
Geotechnical & Environmental Sciences Consultants

701199001 | 8/21

SYMBOLS

SOIL TYPES

Sand
Silt
Fat Clay
Gravel
Silty Sand
Sandy Silt
Lean Clay
Peat or Highly Organic
Clayey Sand
Clayey Silt
Sandy Clay
Fill
Asphalt
Concrete
Silty Clay

SAMPLER TYPES

Auger Cuttings
No Recovery w/ Split Spoon
Shelby Tube
Continuous Push
No Recovery w/ Shelby Tube
Texas Cone Penetration
Modified Split Barrel
Sample Retained by Others
Standard Penetration Test, SPT
No Recover w/ Modified Split Barrel
2-Inch Split Barrel Drive
Vane Shear

TERMINOLOGY

Terms used in this report to describe soils with regard to their consistency or conditions are in general accordance with the discussion presented in Article 45 of SOILS MECHANICS IN ENGINEERING PRACTICE, Terzaghi and Peck, John Wiley & Sons, Inc., 1967, using available information from the field and laboratory studies. Terms used for describing soils according to their texture or grain size distribution are in accordance with the UNIFIED SOIL CLASSIFICATION SYSTEM, as described in American Society for Testing and Materials D2487-11 and D2488-09a, Volume 04.08, Soil and Rock; Dimension Stone; Geosynthetics; 2015.

The depths shown on the boring logs are not exact, and have been estimated to the nearest half-foot. Lines delineating subsurface strata on the boring logs are intended to group soils having similar engineering properties and characteristics. They should be considered approximate as the actual transition between soil types (strata) may be gradual.

RELATIVE DENSITY

Cathead Hammer Penetration Resistance Blows per ft	Relative Density	Automatic Hammer Penetration Resistance Blows per ft
0 - 4	Very Loose	0 - 3
5 - 10	Loose	4 - 7
11 - 30	Medium Dense	8 - 20
31 - 50	Dense	21 - 33
> 50	Very Dense	> 33

COHESIVE STRENGTH

Cathead Resistance Blows per ft	Automatic Resistance Blows per ft	Consistency	Cohesion ksf
0 - 2	< 1	Very Soft	0 - 0.25
3 - 4	1 - 3	Soft	0.25 - 0.5
5 - 8	4 - 5	Firm	0.5 - 1.0
9 - 15	6 - 10	Stiff	1.0 - 2.0
16 - 30	11 - 20	Very Stiff	2.0 - 4.0
> 30	> 20	Hard	> 4.0

SOIL STRUCTURE

Slickensided	Having planes of weakness that appear slick and glossy.
Fissured	Containing shrinkage or relief cracks, often filled with fine sand or silt; usually more or less vertical.
Pocket	Inclusion of material of different texture that is smaller than the diameter of the sample.
Parting	Inclusion less than 1/8 inch thick extending through the sample.
Seam	Inclusion 1/8 inch to 3 inches thick extending through the sample.
Layer	Inclusion greater than 3 inches thick extending through the sample.
Laminated	Soil sample composed of alternating partings or seams of different soil type.
Interlayered	Soil sample composed of alternating layers of different soil type.
Intermixed	Soil sample composed of pockets of different soil type and layered or laminated structure is not evident.
Calcareous	Having appreciable quantities of carbonate.
Carbonate	Having more than 50% carbonate content.

DATE DRILLED 7/26/2021 BORING NO. B-1

GROUND ELEVATION ~ 98 ft MSL SHEET 1 OF 1

METHOD OF DRILLING 4¼" Straight Flight Auger (News - Truck)

DRIVE WEIGHT N/A DROP HEIGHT N/A

SAMPLED BY NEWS LOGGED BY KJK REVIEWED BY JSR

DEPTH, feet	FIELD: WATER LEVEL	FIELD: SYMBOL	FIELD: SAMPLE TYPE	FIELD: BLOWS PER FOOT	CLASSIFICATION: DRY UNIT WEIGHT, pcf	CLASSIFICATION: WATER CONTENT, %	CLASSIFICATION: LIQUID LIMIT	CLASSIFICATION: PLASTIC LIMIT	CLASSIFICATION: PLASTICITY INDEX (PI)	CLASSIFICATION: PASSING NO. 200 SIEVE, %	SHEAR STRENGTH: UNCONFINED OR Q-TYPE COMPR, ksf	SHEAR STRENGTH: TORVANE, tsf	SHEAR STRENGTH: POCKET PEN, ksf	USCS GROUP SYMBOL	DESCRIPTION / INTERPRETATION
0						19	63	23	40	85			3.25	CH	FILL Light gray, reddish brown, and dark brown, moist, very stiff, fat CLAY; few to little sand.
														CH	BEAUMONT FORMATION Dark gray and dark brown, moist, very stiff, fat CLAY.
						25							3.75		
						31	88	33	55	93			2.75		Few sand.
						26							4.25		Light brown and dark brown; hard; ferrous and calcareous nodules.
													4.25		
10															Total Depth = 10 feet. Boring was backfilled with soil cuttings on completion of drilling on 7/26/2021. Note: Groundwater, though not encountered in this boring at the time of drilling, may rise to a higher level due to seasonal variations in precipitation and several other factors discussed in the report. The ground elevation shown above is an estimation only. It is based on interpretation reviewed for the purpose of this evaluation. It is not sufficiently accurate for preparing construction bids and design documents.

FIGURE A-4

Ninyo & Moore
Geotechnical & Environmental Sciences Consultants

GROUND WATER OBSERVATIONS

First Observed (ft): None

After Drilling (ft): Dry

After N/A Hours (ft): N/A

BORING LOG

WEST BELLFORT AVENUE RIGHT TURN LANE
GRAND PARKWAY AND WEST BELLFORT AVENUE
RICHMOND, TEXAS

701199001 | 8/21

DATE DRILLED 7/26/2021 BORING NO. B-2

GROUND ELEVATION ~ 98 ft MSL SHEET 1 OF 1

METHOD OF DRILLING 4¼" Straight Flight Auger (News - Truck)

DRIVE WEIGHT N/A DROP HEIGHT N/A

SAMPLED BY NEWS LOGGED BY KJK REVIEWED BY JSR

DEPTH, feet	FIELD: WATER LEVEL	FIELD: SYMBOL	FIELD: SAMPLE TYPE	FIELD: BLOWS PER FOOT	CLASSIFICATION: DRY UNIT WEIGHT, pcf	CLASSIFICATION: WATER CONTENT, %	CLASSIFICATION: LIQUID LIMIT	CLASSIFICATION: PLASTIC LIMIT	CLASSIFICATION: PLASTICITY INDEX (PI)	CLASSIFICATION: PASSING NO. 200 SIEVE, %	SHEAR STRENGTH: UNCONFINED OR Q-TYPE COMPR, ksf	SHEAR STRENGTH: TORVANE, tsf	SHEAR STRENGTH: POCKET PEN, ksf	USCS GROUP SYMBOL	DESCRIPTION / INTERPRETATION
0														CH	BEAUMONT FORMATION Dark gray and dark brown, moist, stiff, fat CLAY; roots.
													1.5		
						34	85	33	52	95			1.25		Few sand.
						28							3.5		Grayish brown; very stiff.
						25	88	30	58	94			4.5+		Dark brown and light brown; hard; calcareous and ferrous nodules.
						27							4.5+		
10															Total Depth = 10 feet. Boring was backfilled with soil cuttings on completion of drilling on 7/26/2021. Note: Groundwater, though not encountered in this boring at the time of drilling, may rise to a higher level due to seasonal variations in precipitation and several other factors discussed in the report. The ground elevation shown above is an estimation only. It is based on interpretation reviewed for the purpose of this evaluation. It is not sufficiently accurate for preparing construction bids and design documents.

FIGURE A-5

Ninyo & Moore
Geotechnical & Environmental Sciences Consultants

GROUND WATER OBSERVATIONS

First Observed (ft): None

After Drilling (ft): Dry

After N/A Hours (ft): N/A

BORING LOG

WEST BELLFORT AVENUE RIGHT TURN LANE
GRAND PARKWAY AND WEST BELLFORT AVENUE
RICHMOND, TEXAS

701199001 | 8/21

APPENDIX B

Laboratory Testing

FIGURE B-1

LABORATORY TESTING

Classification

Soils were visually and texturally classified using the Unified Soil Classification System (USCS) in general accordance with ASTM D 2488. Soil classifications are indicated on the boring logs in Appendix A and in the following summary tables in Appendix B.

Moisture Content

The moisture content of samples obtained from the exploratory boring were evaluated in general accordance with ASTM D2216. The test results are presented on the boring logs in Appendix A and the Summary of Laboratory Results, Figure B-4.

No. 200 Wash

An evaluation of the percentage of particles finer than the No. 200 sieve in selected soil samples was performed in general accordance with ASTM D1140. The results of the tests are presented on Figure B-2, on the boring logs in Appendix A, and in the Summary of Laboratory Results, Figure B-4.

Atterberg Limits

Tests were performed on selected representative fine-grained soil samples to evaluate the liquid limit, plastic limit, and plasticity index in general accordance with ASTM D4318 (Method B). These test results were utilized to evaluate the soil classification in accordance with the Unified Soil Classification System (USCS). The results of these tests are presented on Figure B-3, on the boring logs in Appendix A, and in the Summary of Laboratory Results, Figure B-4.

SAMPLE LOCATION	DEPTH (feet)	DESCRIPTION	PERCENT PASSING NO. 4	PERCENT PASSING NO. 200	USCS
B-1	0 - 1	Fat CLAY	100.0	85.4	CH
B-1	4 - 6	Fat CLAY	100.0	93.3	CH
B-2	2 - 4	Fat CLAY	100.0	94.6	CH
B-2	6 - 8	Fat CLAY	100.0	94.3	CH

FIGURE B-2

NO. 200 SIEVE WASH

WEST BELLFORT AVENUE RIGHT TURN LANE
GRAND PARKWAY AND WEST BELLFORT AVENUE
RICHMOND, TEXAS

Ninyo & Moore
Geotechnical & Environmental Sciences Consultants

701199001 | 8/21

SYMBOL	LOCATION	DEPTH (FT)	LIQUID LIMIT, LL	PLASTIC LIMIT, PL	PLASTICITY INDEX, PI	USCS (Fraction Finer Than No. 40 Sieve)	USCS (Entire Sample)
●	B-1	0 - 1	63	23	40	CH	CH
⊠	B-1	4 - 6	88	33	55	CH	CH
▲	B-2	2 - 4	85	33	52	CH	CH
★	B-2	6 - 8	88	30	58	CH	CH

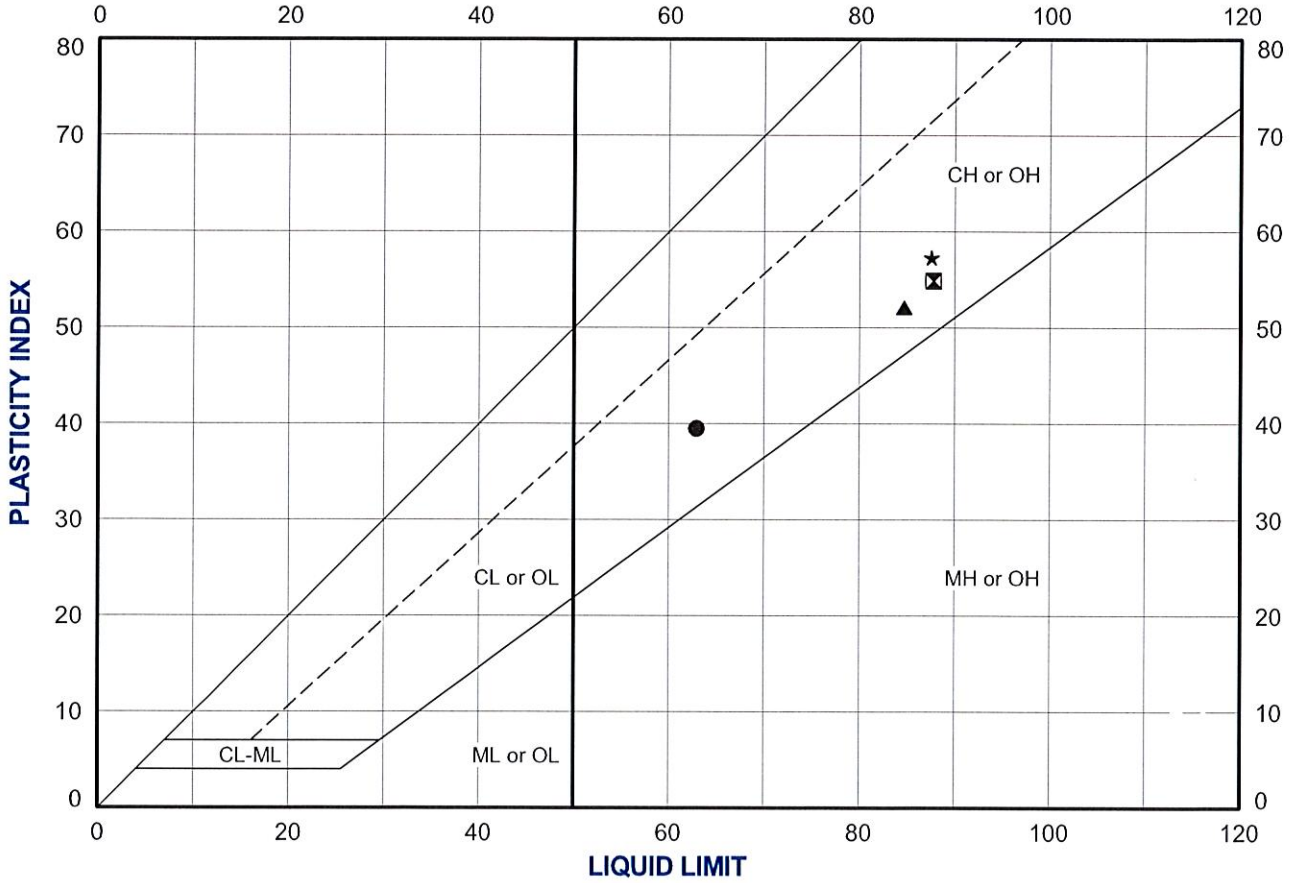

PERFORMED IN GENERAL ACCORDANCE WITH ASTM D4318.

FIGURE B-3

ATTERBERG LIMIT TEST RESULTS

WEST BELLFORT AVENUE RIGHT TURN LANE
GRAND PARKWAY AND WEST BELLFORT AVENUE
RICHMOND, TEXAS

Ninyo & Moore
Geotechnical & Environmental Sciences Consultants

701199001 | 8/21

Borehole	Depth (feet)	Liquid Limit	Plastic Limit	Plasticity Index	Shear Strength (ksf)	%<#200 Sieve	USCS Group Symbol	Water Content (%)	Dry Density (pcf)	Satur-ation (%)	Void Ratio
B-1	0 - 1	63	23	40	3.25[P]	85.4	CH	19.0			
B-1	2 - 4				3.75[P]		CH	25.0			
B-1	4 - 6	88	33	55	2.75[P]	93.3	CH	31.0			
B-1	6 - 8				4.25[P]		CH	26.0			
B-1	8 - 10				4.25[P]		CH				
B-2	0 - 2				1.5[P]		CH				
B-2	2 - 4	85	33	52	1.25[P]	94.6	CH	34.0			
B-2	4 - 6				3.5[P]		CH	28.0			
B-2	6 - 8	88	30	58	4.5+[P]	94.3	CH	25.0			
B-2	8 - 10				4.5+[P]		CH	27.0			

U = Unconfined Compression; Q = Unconsolidated-Undrained Triaxial; T = Torvane; P = Pocket Penetrometer

FIGURE B-4

SUMMARY OF LABORATORY RESULTS

WEST BELLFORT AVENUE RIGHT TURN LANE
GRAND PARKWAY AND WEST BELLFORT AVENUE
RICHMOND, TEXAS

Ninyo & Moore
Geotechnical & Environmental Sciences Consultants

701199001 | 8/21

FORT BEND COUNTY ENGINEERING DEPARTMENT

PROPOSED RIGHT-TURN LANE ALONG W BELLFORT ROAD WB TRAFFIC LANES APPROACHING SH 99 (GRAND PARKWAY) NORTHBOUND FRONTAGE ROAD

PROJECT NO. 20403

VINCENT M. MORALES, JR.
COMMISSIONER — PRECINCT 1

GRADY PRESTAGE
COMMISSIONER — PRECINCT 2

KP GEORGE
COUNTY JUDGE

ANDY MEYERS
COMMISSIONER — PRECINCT 3

KEN R. DeMERCHANT
COMMISSIONER — PRECINCT 4

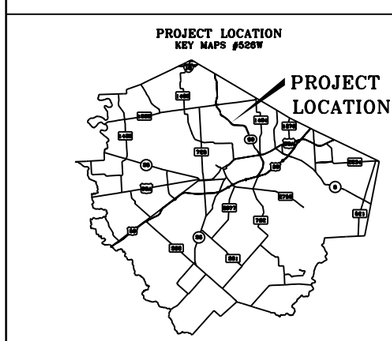

VICINITY MAP
N.T.S.

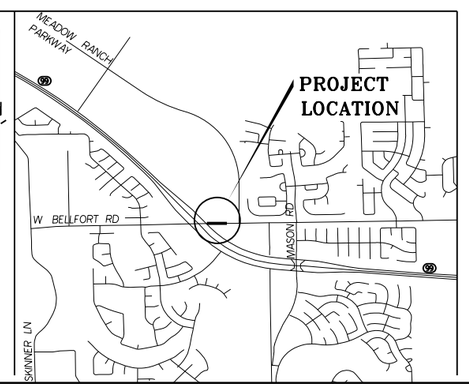

FEBRUARY 2022
PRECINCT #4

Fort Bend County, Texas

STATE OF TEXAS
MAHMOUD SALEHI
89552
LICENSED PROFESSIONAL ENGINEER
2/15/2022

NOTICE:
FOR YOUR SAFETY, YOU ARE REQUIRED BY TEXAS LAW TO CALL 811 AT LEAST 48 HOURS BEFORE YOU DIG SO THAT UNDERGROUND LINE CAN BE MARKED. THIS VERIFICATION DOES NOT FULFILL YOUR OBLIGATION TO CALL 811.

VERIFICATION OF PRIVATE UTILITY LINES

Date 1/20/2022

CENTERPOINT ENERGY/NATURAL GAS UTILITIES SHOWN. (GAS SERVICE LINES ARE NOT SHOWN). THIS SIGNATURE NOT TO BE USED FOR CONFLICT VERIFICATION.

SIGNATURE VALID FOR SIX MONTHS.

Date 1/20/2022

CENTERPOINT ENERGY/UNDERGROUND ELECTRICAL FACILITIES VERIFICATION ONLY.

(THIS SIGNATURE VERIFIES EXISTING UNDERGROUND FACILITIES – NOT TO BE USED FOR CONFLICT VERIFICATION.)

SIGNATURE VALID FOR SIX MONTHS.

John Cowart — Date 01-26-2022

AT&T TEXAS/SWBT FACILITIES
APPROVED FOR AT&T TEXAS/SWBT UNDERGROUND CONDUIT FACILITIES ONLY. SIGNATURE VALID FOR ONE YEAR.

CobbFendley
TBPE Firm Registration No. 274
TBPLS Firm Registration No. 100467
13430 Northwest Freeway, Suite 1100
Houston, Texas 77040
713.462.3242 | fax 713.462.3262
www.cobbfendley.com

APPROVED: _____ 03/11/2022
COUNTY ENGINEER — DATE
J. STACY SLAWINSKI, P.E.

FBCED, STANDARD 01

4:38:05 PM
2/15/2022
B:\Projects\2021\11002*Ft*Bend*County*Engineering\03*West*Bellfort*Street*WB*lanes*onto*SH*99\400*CAD\411*Trans\02-General\211100203*COVER.dgn

SHEET	DESCRIPTION
	GENERAL
1	COVER SHEET
2	INDEX OF DRAWINGS
3-5	GENERAL NOTES
6	QUANTITY SHEETS
7-8	SURVEY CONTROL MAP
9	TYPICAL SECTIONS
10	DEMOLITION PLAN SHEET
	PAVING AND STORM SEWER
11	HORIZONTAL ALIGNMENT DATA
12-13	WEST BELLFORT ROAD PLAN AND PROFILE
14	OVERALL DRAINAGE AREA MAP
15	DRIVEWAY DETAILS
16-17	CONTINUOUSLY REINFORCED CONCRETE PAVEMENT DETAILS
18	CONCRETE CURB AND GUTTER DETAILS
19	FAST TRACK CONCRETE DETAILS
20	SIDEWALK DETAILS
21-23	PED RAMP DETAILS
24	STORM SEWER CONSTRUCTION DETAILS
25	TYPE 'C' INLET DETAILS
	TRAFFIC CONTROL PLAN
26	TRAFFIC CONTROL PLAN
27-31	BC(1) - 14 THROUGH BC(12) - 14
	SIGNING AND PAVEMENT MARKING
32	SIGNING AND PAVEMENT MARKING LAYOUT
33-34	PAVEMENT MARKING DETAILS
35	SIGN MOUNTING DETAILS
	TRAFFIC SIGNAL
36	PROPOSED SIGNAL LAYOUT
	STORM WATER POLLUTION PREVENTION PLAN (SW3P)
37	STORM WATER POLLUTION PREVENTION PLAN
38	STORM WATER POLLUTION PREVENTION PLAN DETAILS
	CROSS SECTIONS
39-41	CROSS SECTION SHEETS
	MISCELLANEOUS DETAILS
42-43	PROJECT SIGN DETAILS

STATE OF TEXAS
MAHMOUD SALEHI
89552
LICENSED
PROFESSIONAL ENGINEER

2/11/2022

No.	Date	Revisions	App.

THE STATE OF TEXAS
FORT BEND COUNTY

CobbFendley
TBPE Firm Registration No. 274
TBPLS Firm Registration No. 100467
22316 Grand Corner Drive, Suite 100
Katy, Texas 77494
713.462.3242 | fax 713.462.3262
www.cobbfendley.com

WEST BELLFORT ROAD
WESTBOUND LANES ONTO SH99

INDEX

SUBMITTED:	DESIGNED BY:
SCALE: N/A	CC'D BY:
DATE: 2/11/2022	SHEET NO 2 OF 43 SHEETS
SURVEY: COBBFENDLEY	
CF JOB NO: 2111-002	

4:03:24 PM
2/11/2022
B:\Projects\2021\11002*Ft*Bend*County*Engineering\03*West*Belfort*Street*WB*lanes*onto*SH*99\400*CAD\411*Trans\02-General\211100203*INDEX.dgn

CONSTRUCTION

1. FORT BEND COUNTY MUST BE INVITED TO THE PRE-CONSTRUCTION MEETING.

2. CONTRACTOR SHALL NOTIFY FORT BEND COUNTY ENGINEERING DEPARTMENT 48 HOURS PRIOR TO COMMENCING CONSTRUCTION AND 48 HOUR NOTICE TO ANY CONSTRUCTION ACTIVITY WITHIN THE LIMITS OF THE PAVING AT CONSTRUCTION@FORTBENDCOUNTYTX.GOV.

3. CONTRACTOR IS RESPONSIBLE FOR OBTAINING ALL PERMITS REQUIRED FROM FORT BEND COUNTY PRIOR TO COMMENCING CONSTRUCTION OF ANY IMPROVEMENTS WITHIN COUNTY ROAD RIGHT OF WAYS.

4. ALL PAVING IMPROVEMENTS SHALL BE CONSTRUCTED IN ACCORDANCE WITH FORT BEND COUNTY "RULES, REGULATIONS AND REQUIREMENTS" RELATING TO THE APPROVAL AND ACCEPTANCE OF IMPROVEMENTS IN SUBDIVISIONS AS CURRENTLY AMENDED.

5. ALL ROAD WIDTHS, CURB RADII AND CURB ALIGNMENT SHOWN INDICATES BACK OF CURB.

6. A CONTINUOUS LONGITUDINAL REINFORCING BAR SHALL BE USED IN THE CURBS.

7. ALL CONCRETE PAVEMENT SHALL BE 5½ SACK CEMENT WITH A MINIMUM COMPRESSIVE STRENGTH OF 3500 PSI AT 28 DAYS. TRANSVERSE EXPANSION JOINTS SHALL BE INSTALLED AT EACH CURB RETURN AND AT A MAXIMUM SPACING OF 60 FEET.

8. ALL WEATHER ACCESS TO ALL EXISTING STREETS AND DRIVEWAYS SHALL BE MAINTAINED AT ALL TIMES.

9. 4" X 12" REINFORCED CONCRETE CURB SHALL BE PLACED IN FRONT OF SINGLE FAMILY LOTS ONLY. ALL OTHER AREAS SHALL BE 6" REINFORCED CONCRETE CURB.

10. CURB HEADERS ARE REQUIRED AT CURB CONNECTIONS TO HANDICAP RAMPS, WITH NO CONSTRUCTION JOINT WITHIN 5' OF RAMPS.

11. GUIDELINES ARE SET FORTH IN THE TEXAS "MANUAL ON UNIFORM TRAFFIC CONTROL DEVICES", AS CURRENTLY AMENDED, SHALL BE OBSERVED. THE CONTRACTOR SHALL BE RESPONSIBLE FOR PROVIDING ADEQUATE FLAGMEN, SIGNING, STRIPING AND WARNING DEVICES, ETC., DURING CONSTRUCTION – BOTH DAY AND NIGHT.

12. ALL R1-1 STOP SIGNS SHALL BE A MINIMUM OF 36"X36" WITH DIAMOND GRADE SHEETING PER TEXAS MANUAL ON UNIFORM TRAFFIC CONTROL DEVICES.

13. STREET NAME SIGNAGE SHALL BE ON A 9" HIGH SIGN FLAT BLADE W/REFLECTIVE GREEN BACKGROUND. STREET NAMES SHALL BE UPPER AND LOWERCASE LETTERING WITH UPPERCASE LETTERS OF 6" MINIMUM AND LOWERCASE LETTERS OF 4.5" MINIMUM. THE LETTERS SHALL BE REFLECTIVE WHITE. STREET NAME SIGNS SHALL BE MOUNTED ON STOP SIGN POST.

14. A BLUE DOUBLE REFLECTORIZED BUTTON SHALL BE PLACED AT ALL FIRE HYDRANT LOCATIONS. THE BUTTON SHALL BE PLACED 12 INCHES OFF OF THE CENTERLINE OF THE STREET ON THE SAME SIDE AS THE HYDRANT.

15. THE PROJECT AND ALL PARTS THEREOF SHALL BE SUBJECT TO INSPECTION FROM TIME TO TIME BY INSPECTORS DESIGNATED BY FORT BEND COUNTY. NO SUCH INSPECTIONS SHALL RELIEVE THE CONTRACTOR OF ANY OF ITS OBLIGATIONS HEREUNDER. NEITHER FAILURE TO INSPECT NOR FAILURE TO DISCOVER OR REJECT ANY OF THE WORK AS NOT IN ACCORDANCE WITH THE DRAWINGS AND SPECIFICATIONS, REQUIREMENTS AND SPECIFICATIONS OF FORT BEND COUNTY OR ANY PROVISION OF THIS PROJECT SHALL BE CONSTRUED TO IMPLY AN ACCEPTANCE OF SUCH WORK OR TO RELIEVE THE CONTRACTOR OF ANY OF ITS OBLIGATIONS HEREUNDER.

16. STABILIZED SUBGRADE: DETERMINE THE THICKNESS OF THE STABILIZED SUBGRADE AFTER CURING AND COMPACTION. IF THE SUBGRADE DEPTH IS GREATER THAN THE PROPOSED THICKNESS BY 20% OR MORE, THE CMT LAB MUST PROVIDE VERIFICATION THE PERCENTAGE OF MATERIAL BEING USED TO STABILIZE THE SUBGRADE MEETS OR EXCEEDS PROJECT REQUIREMENTS. TEST RESULTS REQUIRED.

NOTE: FORT BEND COUNTY NOTES SUPERSEDE ANY CONFLICTING NOTES.

CENTERPOINT ENERGY

CAUTION: UNDERGROUND GAS FACILITIES

THE CONTRACTOR SHALL CONTACT THE UTILITY COORDINATING COMMITTEE AT 1-800-545-6005 OR 811 A MINIMUM OF 48 HOURS PRIOR TO CONSTRUCTION TO HAVE MAIN AND SERVICE LINES FIELD LOCATED.

- WHEN CENTERPOINT ENERGY PIPE LINE MARKINGS ARE NOT VISIBLE, CALL (713) 207-5463 OR (713) 945-8037 (7:00 A.M. TO 4:30 P.M.) FOR STATUS OF LINE LOCATION REQUEST BEFORE EXCAVATION BEGINS.
- WHEN EXCAVATING WITHIN EIGHTEEN INCHES (18") OF THE INDICATED LOCATION OF CENTERPOINT ENERGY GAS FACILITIES, ALL EXCAVATION MUST BE ACCOMPLISHED USING NON-MECHANIZED EXCAVATION PROCEDURES.
- WHEN CENTERPOINT ENERGY FACILITIES ARE EXPOSED, SUFFICIENT SUPPORT MUST BE PROVIDED TO THE FACILITIES TO PREVENT EXCESSIVE STRESS ON THE PIPING.
- FOR EMERGENCIES REGARDING GAS LINES CALL (713) 659-3552 OR (713) 207-4200.

THE CONTRACTOR IS FULLY RESPONSIBLE FOR ANY DAMAGES CAUSED BY HIS FAILURE TO EXACTLY LOCATE AND PRESERVE THESE UNDERGROUND FACILITIES.

WARNING: OVERHEAD ELECTRICAL LINES

OVERHEAD LINES MAY EXIST ON THE PROPERTY. THE LOCATION OF OVERHEAD LINES HAS NOT BEEN SHOWN ON THESE DRAWINGS AS THE LINES ARE CLEARLY VISIBLE, BUT YOU SHOULD LOCATE THEM PRIOR TO BEGINNING ANY CONSTRUCTION. TEXAS LAW, SECTION 752, HEALTH & SAFETY CODE FORBIDS ACTIVITIES THAT OCCUR IN CLOSE PROXIMITY TO HIGH VOLTAGE LINES, SPECIFICALLY:

- ANY ACTIVITY WHERE PERSON OR THINGS MAY COME WITHIN SIX (6) FEET OF LIVE OVERHEAD HIGH VOLTAGE LINES; AND
- OPERATING A CRANE, DERRICK, POWER SHOVEL, DRILLING RIG, PILE DRIVER, HOISTING EQUIPMENT, OR SIMILAR APPARATUS WITHIN 10 FEET OF LIVE OVERHEAD HIGH VOLTAGE LINES.

PARTIES RESPONSIBLE FOR THE WORK, INCLUDING CONTRACTORS ARE LEGALLY RESPONSIBLE FOR THE SAFETY OF CONSTRUCTION WORKERS UNDER THIS LAW. THIS LAW CARRIES BOTH CRIMINAL AND CIVIL LIABILITY. TO ARRANGE FOR LINES TO BE TURNED OFF OR REMOVED CALL CENTERPOINT ENERGY AT (713) 207-2222.

ACTIVITIES ON OR ACROSS CENTERPOINT ENERGY FEE OR EASEMENT PROPERTY

NO APPROVAL TO USE, CROSS OR OCCUPY CENTERPOINT FEE OR EASEMENT PROPERTY IS GIVEN. IF YOU NEED TO USE CENTERPOINT PROPERTY, PLEASE CONTACT OUR SURVEYING & RIGHT OF WAY DIVISION AT (713) 207-6348 OR (713) 207-5769.

CONTRACTOR TO CONTACT THE CENTERPOINT DISTRICT OFFICE SUPERVISOR, BRYAN LYNN, UPON COMMENCEMENT OF SIDEWALK CONSTRUCTION TO ADJUST CNP GAS VALVE STACKS TO MATCH SIDEWALK ELEVATION.

BRYAN LYNN
GAS OPERATIONS SUPERVISOR, RICHMOND DISTRICT
BRYAN.LYNN@CENTERPOINTENERGY.COM
PHONE NUMBER: 777-800-1905

AT&T TEXAS/SWBT FACILITIES

1. THE LOCATIONS OF AT&T TEXAS/SWBT FACILITIES ARE SHOWN IN AN APPROXIMATE WAY ONLY. THE CONTRACTOR SHALL DETERMINE THE EXACT LOCATION BEFORE COMMENCING WORK. HE AGREES TO BE FULLY RESPONSIBLE FOR ANY AND ALL DAMAGES WHICH MIGHT BE OCCASIONED BY HIS FAILURE TO EXACTLY LOCATE AND PRESERVE THESE UNDERGROUND UTILITIES.

2. THE CONTRACTOR SHALL CALL 1-800-344-8377 (TEXAS 811) A MINIMUM OF 48 HOURS PRIOR TO CONSTRUCTION TO HAVE UNDERGROUND LINES FIELD LOCATED.

3. WHEN EXCAVATING WITHIN EIGHTEEN INCHES (18") OF THE INDICATED LOCATION OF AT&T TEXAS/SWBT FACILITIES, ALL EXCAVATIONS MUST BE ACCOMPLISHED USING NON-MECHANIZED EXCAVATION PROCEDURES. WHEN BORING, THE CONTRACTOR SHALL EXPOSE THE AT&T/SWBT FACILITIES.

4. WHEN AT&T TEXAS/SWBT FACILITIES ARE EXPOSED, THE CONTRACTOR WILL PROVIDE SUPPORT TO PREVENT DAMAGE TO THE CONDUIT DUCTS OR CABLES. WHEN EXCAVATING NEAR TELEPHONE POLES THE CONTRACTOR SHALL BRACE THE POLE FOR SUPPORT.

5. THE PRESENCE OR ABSENCE OF AT&T TEXAS/SWBT UNDERGROUND CONDUIT FACILITIES OR BURIED CABLE FACILITIES SHOWN ON THESE PLANS DOES NOT MEAN THAT THERE ARE NO DIRECT BURIED CABLES OR OTHER CABLES IN CONDUIT IN THE AREA.

6. PLEASE CONTACT THE AT&T TEXAS DAMAGE PREVENTION MANAGER MR. ROOSEVELT LEE JR. AT (713) 567-4552 OR E-MAIL HIM AT RL7259@ATT.COM, IF THERE ARE QUESTIONS ABOUT BORING OR EXCAVATING NEAR OUR AT&T TEXAS/SWBT FACILITIES.

STATE OF TEXAS
MAHMOUD SALEHI
89552
LICENSED
PROFESSIONAL ENGINEER
2/17/2022

No.	Date	Revisions	App.

THE STATE OF TEXAS
FORT BEND COUNTY

CobbFendley
TBPE Firm Registration No. 274
TBPLS Firm Registration No. 100467
22316 Grand Corner Drive, Suite 100
Katy, Texas 77494
713.462.3242 | fax 713.462.3262
www.cobbfendley.com

WEST BELLFORT ROAD
WESTBOUND LANES ONTO SH99

CONSTRUCTION
GENERAL NOTES

SUBMITTED:	DESIGNED BY:
SCALE: N/A	CC'D BY:
DATE: 2/17/2022	SHEET NO 3 OF 43 SHEETS
SURVEY: COBBFENDLEY	
CF JOB NO: 2111-002	

4:23:37 PM
2/17/2022
B:\Projects\2021\11002*Ft*Bend*County*Engineering\03*West*Bellfort*Street*WB*lanes*onto*SH99\400*CAD\411*Trans\02-General\211100203*GN01.dgn

GENERAL

1. THE CONTRACTOR SHALL FIELD VERIFY EXISTING CONDITIONS BEFORE BEGINNING CONSTRUCTION.

2. THE CONTRACTOR IS RESPONSIBLE FOR PROVIDING SECURITY TO PROTECT THE PROJECT SITE, CONTRACTOR PROPERTY, EQUIPMENT, AND WORK.

3. THE CONTRACTOR IS RESPONSIBLE FOR CLEANING STREETS OF CONSTRUCTION DIRT AND DEBRIS AT CLOSE OF EACH WORK DAY.

4. THE CONDITION OF THE ROAD AND/OR RIGHT-OF-WAY, UPON COMPLETION OF THE JOB SHALL BE AS GOOD AS OR BETTER THAN PRIOR TO STARTING WORK.

5. PRIOR TO CONSTRUCTION, THE CONTRACTOR, ALONG WITH CONCURRENCE FROM THE FIELD ENGINEER, SHALL DETERMINE HIS/HER LAY-DOWN AND/OR STAGING AREA LOCATIONS.

6. THE CONTRACTOR SHALL NOTIFY ALL PROPERTY OWNERS A MINIMUM OF 24 HOURS PRIOR TO BLOCKING DRIVEWAYS OR ENTERING UTILITY EASEMENTS.

7. TRAFFIC INGRESS AND EGRESS FOR DRIVEWAYS AND PEDESTRIAN ACCESS FACILITIES SHALL BE MAINTAINED THROUGHOUT CONSTRUCTION WITH ALL WEATHER SURFACES.

8. THE CONTRACTOR SHALL REMOVE ANY FENCES, POSTS, MAILBOXES, PLANTERS, PERMANENT TRASH CONTAINERS, CULVERTS, ETC. OR SECTIONS THEREOF, THAT ENCROACH WITHIN THE COUNTY'S RIGHT-OF-WAY. NOTE: PRIOR TO CONSTRUCTION, THE PROPERTY OWNER WAS PAID TO RELOCATE OR REPLACE THESE ITEMS OUTSIDE OF THE COUNTY'S RIGHT-OF-WAY. IF THE OWNER HAS FAILED TO DO SO, THE CONTRACTOR WILL REPLACE THEM WITH THE MINIMUM LEVEL OF QUALITY NEEDED TO SECURE THE PROPERTY AND/OR MAINTAIN MAIL DELIVERY. IN THAT CASE, PAYMENT FOR THESE INSTALLATIONS WILL BE INCLUDED AS EXTRA WORK ITEMS OR AS OVERRUNS TO EXISTING PAY ITEMS.

   ANY DAMAGE CAUSED BY THE CONTRACTOR TO SUCH ITEMS LOCATED OUTSIDE OF THE COUNTY'S RIGHT-OF-WAY, SHALL BE REPLACED WITH LIKE-KIND OR BETTER AT THE CONTRACTOR'S EXPENSE.

   ALSO, IF THESE ITEMS ARE LOCATED WITHIN THE PROJECT RIGHT-OF-WAY AND ARE DESIGNATED TO REMAIN, ANY DAMAGE CAUSED BY THE CONTRACTOR TO SUCH ITEMS, SHALL BE REPLACED WITH LIKE-KIND OR BETTER AT THE CONTRACTOR'S EXPENSE.

   TREES, BUSHES, SHRUBBERY AND OTHER DAMAGED PLANTINGS DESIGNATED TO REMAIN SHALL BE REPLACED WITHIN 72 HOURS OF REMOVAL AND ARE TO BE THOROUGHLY WATERED-IN. NO SEPARATE PAY.

9. PAVED SURFACES, PAVEMENT MARKERS AND MARKINGS SHALL BE PROTECTED FROM DAMAGE BY TRACKED EQUIPMENT.

10. IRON RODS DISTURBED DURING CONSTRUCTION ARE TO BE REPLACED BY A REGISTERED PROFESSIONAL LAND SURVEYOR FOR THE ORIGINAL PROPERTY OWNER AT NO SEPARATE PAY.

11. CONSTRUCTION STAKING WILL BE PROVIDED BY THE CONTRACTOR. TWO COPIES OF STAKING NOTES TO BE PROVIDED TO THE ENGINEER PRIOR TO CONSTRUCTION.

12. THE COUNTY OR THE COUNTY'S SURVEYOR SHALL PROVIDE A BENCHMARK OR TEMPORARY BENCHMARK AND SURVEY CONTROLS.

13. THE CONTRACTOR SHALL MAINTAIN UPDATED RED-LINED RECORD DRAWINGS ON SITE FOR INSPECTION BY THE ENGINEER.

14. MOWING, MAINTENANCE, AND CLEAN-UP OF THE PROJECT SHALL MEET THE REQUIREMENT OF SPECIFICATION ITEM 560 (NO SEPARATE PAY). MOWING, MAINTENANCE, AND CLEAN-UP IS REQUIRED FOR THE PROJECT LIMITS AND DURATION, REGARDLESS OF THE CONTRACTOR'S SCOPE OF ACTIVITIES WITHIN THE PROJECT LIMITS.

15. THE REMOVAL OF ANY ABANDONED UTILITIES REQUIRED TO COMPLETE THE WORK SHALL BE INCIDENTAL AND NO SEPARATE PAYMENT SHALL BE MADE.

16. IT IS THE CONTRACTOR'S RESPONSIBILITY TO STOCKPILE NECESSARY MATERIAL ON-SITE OR AT A SECURED OFF-SITE LOCATION AT NO ADDITIONAL EXPENSE TO FORT BEND COUNTY. ANY SUITABLE EXCAVATED MATERIAL ON THE PROJECT WHICH IS AVAILABLE AT THE TIME OF NEED; WHETHER FROM STORM SEWER, ROADWAY, AND/OR CHANNEL EXCAVATION, SHALL BE USED BEFORE BORROW IS BROUGHT ON-SITE.

17. MANHOLES, JUNCTION BOXES, INLETS, AND RISERS ARE TO BE PRE-CAST OR CAST IN PLACE.

18. THE FOLLOWING DETAILS ARE MINIMUM REQUIREMENTS AND MAY BE SUPERSEDED BY GEOTECHNICAL ENGINEER RECOMMENDATIONS OR MORE STRINGENT REQUIREMENTS FROM THE CITY'S ETJ PROJECT IS WITHIN.

19. POP UP DRAINS ARE NOT ALLOWED IN FORT BEND COUNTY RIGHT OF WAY.

TRAFFIC SIGNAL

1. ALL ITEMS RELATING TO THE CONSTRUCTION OF TRAFFIC SIGNAL INSTALLATIONS, EXCEPT FOR PUNCHLIST ITEMS, SHALL BE COMPLETED PRIOR TO THE ACTIVATION OF THE SIGNAL SYSTEM(S), UNLESS OTHERWISE REQUIRED BY THE CONTRACT.

2. THE CONTRACTOR SHALL MEET WITH THE FORT BEND COUNTY TRAFFIC SIGNAL MAINTENANCE GROUPS FIELD INSPECTOR, HEREAFTER REFERRED TO AS THE TRAFFIC INSPECTOR, ONE-WEEK PRIOR TO THE DESIRED ACTIVATION OF ANY NEW TRAFFIC SIGNALS. THE CONTRACTOR SHALL OBTAIN VERBAL CONCURRENCE FROM THE TRAFFIC INSPECTOR THAT ADEQUATE PROGRESS HAS BEEN ACHIEVED AND THAT ADEQUATE PREPARATIONS ARE IN PLACE TO SCHEDULE A PRE-"TURN ON" WALK-THROUGH INSPECTION MEETING. IF IN THE OPINION OF THE TRAFFIC INSPECTOR, REQUIRED PROGRESS AND ADEQUATE PREPARATIONS ARE NOT COMPLETE, THE PRE-"TURN ON" WALK-THROUGH INSPECTION MEETING WILL BE POSTPONED TO ALLOW ADEQUATE TIME FOR INCOMPLETE CONSTRUCTION ITEMS AND PREPARATIONS TO BE COMPLETED. AFTER THE CONTRACTOR HAS COMPLETED ALL INCOMPLETE ITEMS AND PREPARATIONS, THE CONTRACTOR SHALL REQUEST THE TRAFFIC INSPECTOR REVIEW AND APPROVE ITEMS PREVIOUSLY IDENTIFIED. IF, IN THE OPINION OF THE TRAFFIC INSPECTOR, ALL ITEMS HAVE BEEN ADDRESSED SATISFACTORILY, THE DATE OF THE PRE-"TURN ON" WALK-THROUGH INSPECTION SHALL BE ESTABLISHED. TIME EXTENSIONS TO THE CONTRACT TIME WILL NOT BE GRANTED FOR DELAYS CAUSED BY INCOMPLETE CONSTRUCTION OR INADEQUATE CONTRACTOR PREPARATIONS REQUIRED TO COMPLETE TRAFFIC SIGNAL SYSTEM WITHIN THE TIMEFRAME SET FORTH IN THE CONTRACT.

3. PRIOR TO ACTIVATING A NEW TRAFFIC SIGNAL, THE CONTRACTOR SHALL REQUEST A PRE-TURN ON WALK-THROUGH INSPECTION MEETING, IN ACCORDANCE WITH ITEM 2 THE PURPOSE OF THE MEETING WILL BE TO ESTABLISH THAT THE TRAFFIC SIGNAL SYSTEM HAS BEEN CONSTRUCTED IN ACCORDANCE WITH THE CONTRACT, AND IN A MANNER THAT DOES NOT ADVERSELY IMPACT PUBLIC SAFETY. THIS MEETING SHALL BE ATTENDED BY THE TRAFFIC INSPECTOR, THE ENGINEER OF RECORD, AND THE CONTRACTOR. AS A MINIMUM, ANY DEFICIENCIES THAT ADVERSELY IMPACT PUBLIC SAFETY WILL BE IDENTIFIED FOR CORRECTION PRIOR TO ESTABLISHING THE "TURN ON" DATE FOR THE TRAFFIC SIGNAL SYSTEM. ITEMS THAT HAVE AN IMPACT ON PUBLIC SAFETY INCLUDE, BUT ARE NOT LIMITED TO: PAVEMENT MARKINGS AND SIGNAGE, PROPER AND ACCEPTABLE BONDING OF EARTH GROUNDS, PROPERLY ALIGNED TRAFFIC SIGNALS, FULLY OPERATIONAL VEHICULAR AND PEDESTRIAN DETECTION, COMPLETED CABINET-TO-FIELD WIRING, AND PROPERLY TERMINATED ELECTRICAL SERVICE CONDUCTORS. FAILURE TO ADDRESS THE PUNCHLIST ITEMS IDENTIFIED AS BEING CRITICAL TO PUBLIC SAFETY PRIOR TO THE PRE-TURN ON WALK-THROUGH MEETING WILL RESULT IN THE "TURN ON" BEING POSTPONED TO ALLOW ADEQUATE TIME FOR THE INCOMPLETE ITEMS TO BE COMPLETED. AT SUCH TIME AS MEETING ATTENDEES AGREE THAT THE TRAFFIC SIGNAL HAS BEEN CONSTRUCTED IN ACCORDANCE WITH THE CONTRACT, AND THAT THE TRAFFIC SIGNAL, AS IT EXISTS, IS NOT A THREAT TO PUBLIC SAFETY, A "TURN ON" DATE WILL BE ESTABLISHED.

4. THE CONTRACTOR SHALL HAVE 10 DAYS FROM THE DATE THE TRAFFIC SIGNAL SYSTEM IS TURNED ON TO COMPLETE ANY PUNCHLIST ITEMS IDENTIFIED AT THE PRE-"TURN ON" WALK-THROUGH MEETING OR AT THE TIME THE SIGNAL SYSTEM IS ACTIVATED THAT ARE NOT OTHERWISE ADDRESSED PRIOR TO ACTIVATION OF THE TRAFFIC SIGNAL SYSTEM.

5. THE CONTRACTOR'S ATTENTION IS DIRECTED TO STANDARD SPECIFICATION ITEM 1000, TRAFFIC SIGNAL INSTALLATION AND MODIFICATION, WHICH INCLUDES PROCEDURES AND REQUIREMENTS REGARDING ACTIVATION OF TRAFFIC SIGNAL CONTROL SYSTEMS. THE PROJECT MANUAL MAY INCLUDE SPECIAL SPECIFICATIONS AND/OR SPECIAL PROVISIONS RELATED TO PROPOSED TRAFFIC CONTROL SIGNAL SYSTEM INSTALLATION(S) AND MODIFICATION(S) REQUIRING THE CONTRACTOR'S ADHERENCE TO DEFINED CHECKLISTS, PROCEDURES AND/OR REPORTS AT NO ADDITIONAL COST TO THE COUNTY BEYOND THE ESTABLISHED BID ITEMS OF THE CONTRACT.

6. ALL SIGNAL ALTERATIONS MUST BE APPROVED AND COORDINATED THROUGH FBC ENGINEERING AND ROAD & BRIDGE.

TRAFFIC CONTROL

1. THE CONTRACTOR SHALL PROVIDE AND INSTALL TRAFFIC CONTROL DEVICES IN CONFORMANCE WITH PART VI OF THE MOST RECENT EDITION OF THE MANUAL ON UNIFORM TRAFFIC CONTROL DEVICES AND THE APPROVED TRAFFIC CONTROL PLAN.

2. THE CONTRACTOR SHALL MAINTAIN AT LEAST ONE LANE OF TRAFFIC IN EACH DIRECTION DURING WORKING HOURS EXCEPT DURING FLAGGING OPERATION

3. LANE CLOSURES SHALL BE DURING OFF-PEAK HOURS ONLY (MONDAY THROUGH FRIDAY 9 A.M. TO 4 P.M.) UNIFORMED PEACE OFFICERS OR FLAGGERS IN RADIO CONTACT ARE REQUIRED TO DIRECT TRAFFIC DURING LANE CLOSURES.

4. DETOURS REQUIRE PRIOR APPROVAL OF THE FIELD ENGINEER AND PRECINCT. DETOUR PLANS, IF ALLOWED, MUST INCLUDE APPROPRIATE DETOUR SIGNAGE, PUBLIC NOTICE VIA SIGNAGE TWO WEEKS IN ADVANCE STATING THE DATES OF THE AGREED UPON DATE OF CLOSURE AND DATE THE ROAD WILL RE-OPEN TO TRAFFIC. CONTRACTOR TO USE (WITH PRIOR APPROVAL OF THE FIELD ENGINEER) HIGH EARLY STRENGTH CONCRETE AND OTHER RELATED CONSTRUCTION METHODS TO MINIMIZE THE DURATION OF THE DETOUR AND TO ENSURE THAT THE ROADWAY IS OPEN ON, OR PRIOR TO, THE AGREED UPON DATE.

5. ONE DAY PRIOR TO THE IMPLEMENTATION OF A TRAFFIC CONTROL PLAN PHASE OR STEP, OR THE IMPLEMENTATION OF AN ADDITIONAL, REVISED, OR NEW TRAFFIC CONTROL ELEMENT, THE CONTRACTOR SHALL MEET WITH THE ENGINEER TO GIVE A DETAILED DESCRIPTION OF THE CONTRACTOR'S PLAN AND PREPARATIONS. THE CONTRACTOR SHALL OBTAIN WRITTEN CONCURRENCE FROM THE ENGINEER THAT ADEQUATE PROJECT PROGRESS HAS BEEN ACHIEVED AND THAT ADEQUATE PREPARATIONS ARE IN PLACE PRIOR TO SWITCHING TRAFFIC. IF, IN THE OPINION OF THE ENGINEER, REQUIRED PROGRESS AND ADEQUATE PREPARATIONS ARE NOT COMPLETE, THE CONTRACTOR SHALL NOT IMPLEMENT THE NEXT PHASE, STEP, OR ELEMENT OF TRAFFIC CONTROL UNTIL INCOMPLETE CONSTRUCTION ITEMS OR PREPARATIONS ARE COMPLETED. TIME EXTENSIONS WILL NOT BE GRANTED FOR DELAYS CAUSED BY THE INCOMPLETE CONSTRUCTION ITEMS OR INADEQUATE CONTRACTOR PREPARATIONS REQUIRED TO IMPLEMENT TRAFFIC CONTROL.

6. TRAFFIC CONTROL PER THE CONTRACT IS REQUIRED FOR THE ENTIRE DURATION OF THE PROJECT, INCLUDING THE PUNCHLIST PERIOD. PAYMENT FOR TRAFFIC CONTROL THAT IS PROPERLY INSTALLED FOR LESS THAN A FULL MONTH SHALL BE BASED ON A PERCENTAGE BASIS OF THE TIME INSTALLED. TRAFFIC CONTROL PAYMENTS TO THE CONTRACTOR SHALL END 10 DAYS AFTER SUBSTANTIAL COMPLETION, ALTHOUGH PROPER TRAFFIC CONTROL MUST BE MAINTAINED UNTIL PUNCHLIST COMPLETION.

7. THE PURPOSE OF THE CONSTRUCTION SEQUENCE AND TRAFFIC HANDLING OUTLINED HEREIN IS TO DOCUMENT A VIABLE TCP THAT CAN BE UTILIZED TO CONSTRUCT THE PROJECT. IT IS THE BASIS OF ESTIMATION FOR THE TRAFFIC CONTROL BID ITEMS, AND IS TO BE UTILIZED AND IMPLEMENTED, UNLESS OTHERWISE DIRECTED BY THE ENGINEER. IF THE CONTRACTOR CHOOSES TO USE A DIFFERENT TCP, HE/SHE SHALL PREPARE AND SUBMIT THE ALTERNATIVE TCP TO THE COUNTY FOR APPROVAL NO LESS THAN 10 WORKING DAYS PRIOR TO THE PROPOSED IMPLEMENTATION DATE. THE TCP SHALL BE DRAWN TO SCALE AND SIGNED & SEALED BY A PROFESSIONAL ENGINEER LICENSED TO PRACTICE IN THE STATE OF TEXAS. UPON APPROVAL BY FORT BEND COUNTY, THE ALTERNATIVE PLAN SHALL BECOME THE BASIS FOR A "CHANGE IN CONTRACT" TO REVISE THE TRAFFIC CONTROL BID ITEMS ACCORDINGLY AND BECOME PART OF THE CONTRACT DOCUMENTS.

8. ALL TEMPORARY PAVEMENT MARKINGS ON PERMANENT PAVEMENT SHOULD BE RPMS OR TABS.

9. TRAFFIC PATTERN CHANGES REQUIRE CHANGEABLE MESSAGE BOARDS PLACED AT LEAST 2 WEEKS IN ADVANCE OF PROPOSED CHANGE. QUANTITY, PLACEMENT AND WORDING TBD BY FBC.

STATE OF TEXAS
MAHMOUD SALEHI
89552
LICENSED
PROFESSIONAL ENGINEER
2/11/2022

No.	Date	Revisions	App.

THE STATE OF TEXAS
FORT BEND COUNTY

CobbFendley
TBPE Firm Registration No. 274
TBPLS Firm Registration No. 100467
22316 Grand Corner Drive, Suite 100
Katy, Texas 77494
713.462.3242 | fax 713.462.3262
www.cobbfendley.com

WEST BELLFORT ROAD
WESTBOUND LANES ONTO SH99

PUBLIC WORKS AND
SUBDIVISION
GENERAL NOTES

SUBMITTED:	DESIGNED BY:
SCALE: N/A	CC'D BY:
DATE: 2/11/2022	SHEET NO 4 OF 43 SHEETS
SURVEY: COBBFENDLEY	
CF JOB NO: 2111-002	

4:03:27 PM
2/11/2022
B:\Projects\2021\11002*Ft*Bend*County*Engineering\03*West*Belfort*Street*WB*lanes*onto*SH*99\400*CAD\411*Trans\02-General\211100203*GN02.dgn

TRAFFIC SIGNAL

1. INSTALL SIGNS AND SIGNALS HORIZONTALLY ON MAST ARM 17 FT-6 IN MINIMUM ABOVE THE ROADWAY.
2. FURNISH BLACK HOUSING FOR VEHICLE SIGNALS WITH 12-IN LENS AND BLACK BACKPLATES.
3. TRAFFIC SIGNAL STRAIN POLES AND MAST ARMS SHALL BE STANDARD GALVANIZED. (SIGNAL POLES AND MAST ARMS SHALL BE POWDER-COATED IN BLACK POLES UNLESS OTHER ENTITY IS PAYING FOR UPGRADES.)
4. FURNISH VEHICLE AND COUNTDOWN PEDESTRIAN SIGNALS WITH LIGHT EMITTING DIODE (LED) SIGNAL LAMP UNITS.
5. SYMBOLIC PEDESTRIAN SIGNAL HEAD SHALL BE LED AUDIBLE PEDESTRIAN AND 12-IN COUNTDOWN.
6. USE DIAMOND GRADE RETROREFLECTIVE SHEETING FOR SIGNS MOUNTED UNDER OR ADJACENT TO THE SIGNAL HEADS.
7. FURNISH SYMBOL TYPE PEDESTRIAN COUNTDOWN SIGNALS. INSTALL USING MOUNTING HEIGHT IN ACCORDANCE WITH THE LATEST "TEXAS MANUAL ON UNIFORM CONTROL DEVICES."
8. FURNISH MATERIALS NECESSARY TO INSTALL ACCESSIBLE PEDESTRIAN UNITS (SEE FBC APPROVED TRAFFIC SIGNAL EQUIPMENT LIST) AS SHOWN IN THE PLANS. INSTALL PUSH BUTTON AT 3 FT-6 IN. TO 4 FT.-0 IN ABOVE THE SIDEWALK OR CONCRETE WALKWAY.
9. ROUTE CABLE FOR LUMINAIRES (4/C NO. 12 TRAY CABLE) TO THE SERVICE ENCLOSURE. SEE ELECTRICAL DETAILS SHEET.
10. INSTALL FULL-ACTUATED, ETHERNET-CAPABLE CONTROLLER WITH INTERNAL TIME BASED COORDINATION UNIT AND COMMUNICATION IN A BASE MOUNTED CABINET. SEE FBC APPROVED TRAFFIC SIGNAL EQUIPMENT LIST.
11. LOCATE CONTROLLERS, STEEL POLES, DETECTION ZONES AS APPROVED BY FORT BEND COUNTY IN THE FIELD.
12. REPAIR OR REPLACE PAVEMENT AND SIDEWALKS DAMAGED BY THE CONTRACTOR'S FORCES DURING CONSTRUCTION AT NO COST TO THE COUNTY.
13. FURNISH AND INSTALL DUCT SEAL TO ENCLOSE THE ENDS OF EACH CONDUIT CONTAINING SIGNAL CABLE.
14. THE CONTRACTOR SHALL INSTALL A CLOSED NIPPLE WITH LOCK NUT AND BUSHING (SIZE AS REQUIRED) TO PREVENT ABRASION TO SIGNAL CABLE WHERE THE CABLE ENTERS THE UPPER PORTION OF THE SIGNAL POLE.
15. DO NOT PLACE SIGNAL HEADS OVER THE ROADWAY UNTIL ALL NECESSARY MATERIALS ARE ON HAND AS APPROVED.
16. INSTALL TWO SET SCREWS ON ALL VEHICLE SIGNAL HEAD MOUNTING HARDWARE FITTINGS.
17. WRAP SIGNAL HEADS WITH DARK PLASTIC OR SUITABLE MATERIAL TO CONCEAL THE SIGNAL FACES FROM THE ITEM OF INSTALLATION UNTIL PLACING INTO OPERATION. DO NOT USE BURLAP.
18. INSTALL A 5/8-IN (MINIMUM) EYE BOLT FOR THE POINT OF ATTACHMENT BELOW THE SERVICE ENTRANCE WEATHERHEAD FOR THE SERVICE DROP (120/240 VOLT SERVICE) TO STEEL POLE.
19. LUMINAIRES MOUNTED ON TRAFFIC SIGNAL POLES SHALL BE IN COMPLIANCE WITH TXDOT STANDARDS.
20. PROVIDE LIGHT-EMITTING DIODE (LED) LUMINAIRES EQUIVALENT TO "250 WATT HIGH PRESSURE SODIUM" LUMINAIRES, OPERATING AT 240 VOLTS.
21. GROUND STEEL MAST ARM POLE ASSEMBLIES IN ACCORDANCE WITH REQUIREMENTS SHOWN ON THE LATEST TXDOT TRAFFIC SIGNAL POLE FOUNDATION STANDARD. USE THE GROUNDING LUG ON THE POLE TO GROUND THE POLE TO THE GROUND CONDUCTORS FROM THE CONDUITS.
22. VERIFY THE CORRECT MAST ARM POLE LENGTHS FOR THE ULTIMATE CONFIGURATION OF THIS SIGNALIZED INTERSECTION PRIOR TO ORDERING THE EQUIPMENT.
23. ELECTRICAL POWER TO OPERATE THE TRAFFIC SIGNAL INSTALLATION WILL BE PLACED IN THE COUNTY'S NAME. THIS INCLUDES ALL POWER TO OPERATE THE SIGNAL DURING THE VARIOUS PHASES OF CONSTRUCTION AND DURING THE TEST PERIOD PRIOR TO ACCEPTANCE OF THE WORK BY FORT BEND COUNTY.
24. INSTALL PEDESTRIAN SIGNAL POLES WITH SCREW-IN ANCHOR FOUNDATION.
25. THE ENGINEER WILL PROVIDE PHASING AND TIMINGS FOR TEMPORARY AND PERMANENT TRAFFIC SIGNALS.
26. EXISTING STOP SIGNS AND SCHOOL CROSSING ASSEMBLIES AT THE INTERSECTION SHALL BE REMOVED AND RETURNED TO FORT BEND COUNTY.
27. ALL EXISTING EQUIPMENT THAT WILL NOT BE INSTALLED ON THE SIGNAL POLES AND/OR MAST ARMS SHALL BE RETURNED TO FORT BEND COUNTY.
28. ALL TRAFFIC SIGNAL POLE FOUNDATION LOCATIONS SHALL BE APPROVED BY THE ENGINEER OR REPRESENTATIVE IN THE FIELD PRIOR TO DRILLING.
29. FURNISH VIDEO IMAGING VEHICLE DETECTION SYSTEM (VIVDS) CABLE RECOMMENDED BY MANUFACTURER OR PURCHASE CABLE FROM THE SAME MANUFACTURER THAT SUPPLIED/PROVIDED THE VIVDS EQUIPMENT.
30. THE LOCATION OF THE VIVDS DETECTION ZONE IS APPROXIMATE. THE EXACT LOCATION WILL BE DETERMINED BY THE ENGINEER AND/OR FORT BEND COUNTY ROAD AND BRIDGE SIGNAL TECHNICIANS.
31. THE VENDORS' REPRESENTATIVES OF THE VIVDS EQUIPMENT SUPPLIED FOR THIS PROJECT MUST SUPERVISE THE INSTALLATION, SETUP AND TESTING. THE REPRESENTATIVE MUST BE ON SITE DURING THIS TIME. ANY EQUIPMENT REQUIRED FOR SETUP AND OPERATION OF THE VIVDS DEVICES MUST BE PROVIDIED TO THE COUNTY UPON COMPLETION.

STATE OF TEXAS
MAHMOUD SALEHI
89552
LICENSED
PROFESSIONAL ENGINEER

2/11/2022

No.	Date	Revisions	App.

THE STATE OF TEXAS
FORT BEND COUNTY

CobbFendley
TBPE Firm Registration No. 274
TBPLS Firm Registration No. 100467
22316 Grand Corner Drive, Suite 100
Katy, Texas 77494
713.462.3242 | fax 713.462.3262
www.cobbfendley.com

WEST BELLFORT ROAD
WESTBOUND LANES ONTO SH99

TRAFFIC SIGNAL
GENERAL NOTES

SUBMITTED:	DESIGNED BY:
SCALE: N/A	CC'D BY:
DATE: 2/11/2022	SHEET NO 5 OF 43 SHEETS
SURVEY: COBBFENDLEY	
CF JOB NO: 2111-002	

4:03:27 PM
2/11/2022
B:\Projects\2021\11002*Ft*Bend*County*Engineering\03*West*Belfort*Street*WB*lanes*onto*SH*99\400*CAD\411*Trans\02-General\211100203*GN03.dgn

SUMMARY OF SITE PREPARATION QUANTITIES

SPEC NO.	BEGIN STATION	END STATION	104	104	495	495
DESCRIPTION			CLARING AND GRUBBING	REMOVING OLD CONCRETE (EXISTING PAVEMENT WITH OR WITHOUT CURBS, DRIVEWAYS AND	REMOVING OLD STRUCTURES INLETS (ALL DEPTHS)	REMOVING OLD STRUCTURES PEDESTRIAN POLE
UNIT			STA	SY	EA	EA
LOCATION						
WEST BELLFORT ROAD						
SHEET 1 OF 1	BEGIN	END	5	384	1	1
TOTALS			**5**	**384**	**1**	**1**

SUMMARY OF CONSTRUCTION QUANTITIES

SPEC NO.	BEGIN STATION	END STATION	110	360	460	472	472	530	530	530	535	536	561	DWG
DESCRIPTION			ROADWAY EXCAVATION INCLUDING 3" STRIPPING	CONCRETE PAVEMENT (FAST TRACK) (13")	REINFORCED CONCRETE PIPE, C76, CLASS III, RUBBER GASKET (24")	TYPE C INLET	TYPE C-2 INLET	REINFORCED CONCRETE CURB (6")	SIDEWALK	ADA RAMP TYPE 7 (MOD)	6" CONCRETE FOR MEDIANS AND DIRECTIONAL ISLANDS	COLORING CONCRETE FOR MEDIAN NOSES	VIDEO RECORDING CONSTRUCTI ON	INSTALL, MAINTAIN AND REMOVE PROJECT SIGN
UNIT			CY	SY	LF	EA	EA	LF	SY	EA	SY	SY	LS	EA
LOCATION														
WEST BELLFORT ROAD														
SHEET 1 OF 2	BEGIN	12+00.00	235	366	112	1	1	264	120	3	16	1	1	1
SHEET 2 OF2	12+00.00	END	239	381	0	0	0	304	60	2	0	0	0	1
TOTALS			**474**	**747**	**112**	**1**	**1**	**568**	**180**	**5**	**16**	**1**	**1**	**2**

SUMMARY OF SIGNING AND PAVEMENT MARKING QUANTITIES

SPEC NO.	BEGIN STATION	END STATION	500	624	660	660	660	660	660	663
DESCRIPTION			REMOVE & RELOCATE ROADWAY SIGNS	ALUMINUM SIGNS (GROUND MOUNTED) FURNISH & INSTALL	REFL PVMT MRK - TYPE 1 (8") (WHITE) (SOLID)	REFL PVMT MRK - TYPE 1 (12") (WHITE) (SOLID)	REFL PVMT MRK - TYPE 1 (24") (WHITE) (SOLID)	REFL PVMT MRK - TYPE 1 (W) (RIGHT ARROW) (ALL SIZES)	REFL PVMT MRK - TYPE 1 (W) (WORD "ONLY")	REFL PVMT MRKRS - TYPE II C-R
UNIT			EA	EA	LF	LF	LF	EA	EA	EA
LOCATION										
WEST BELLFORT ROAD										
SHEET 1 OF 1	BEGIN	END	1	2	169	331	60	2	2	34
TOTALS			**1**	**2**	**169**	**331**	**60**	**2**	**2**	**34**

SUMMARY OF STORM WATER POLLUTION PREVENTION PLAN QUANTITIES

SPEC NO.	BEGIN STATION	END STATION	162	165	700	741	751
DESCRIPTION			SODDING FOR EROSION CONTROL (16" BEHIND CURB)	HYDRO-MULCH SEEDING	TPDES GENERAL PERMIT NO. TXR 150000, NOTICE OF	INLET PROTECTION BARRIER (FOR STAGE II INLETS, GRAVEL BAGS)	SWPPP INSPECTION AND MAINTENANCE (ALL SIZES)
UNIT			LF	AC	EA	EA	MO
LOCATION							
WEST BELLFORT ROAD							
SHEET 1 OF 1	BEGIN	END	502	0.12	1	4	3
TOTALS			**502**	**0.12**	**1**	**4**	**3**

STATE OF TEXAS
MAHMOUD SALEHI
89552
LICENSED
PROFESSIONAL ENGINEER
2/11/2022

No.	Date	Revisions	App.

THE STATE OF TEXAS
FORT BEND COUNTY

CobbFendley
TBPE Firm Registration No. 274
TBPLS Firm Registration No. 100467
22316 Grand Corner Drive, Suite 100
Katy, Texas 77494
713.462.3242 | fax 713.462.3262
www.cobbfendley.com

WEST BELLFORT ROAD
WESTBOUND LANES ONTO SH99

QUANTITY SUMMARY SHEET

SUBMITTED:	DESIGNED BY:
SCALE: N/A	CC'D BY:
DATE: 2/11/2022	SHEET NO 6 OF 43 SHEETS
SURVEY: COBBFENDLEY	
CF JOB NO: 2111-002	

4:03:36 PM
2/11/2022
B:\Projects\2021\111002-Ft+Bend+County+Engineering\03+West+Bellfort+Street+WB+lanes+onto+SH99\400+CAD\411+Trans\02-General\211100203+QUANTSUM01.dgn

1. ALL COORDINATES AND BEARINGS SHOWN ARE BASED ON THE TEXAS COORDINATE SYSTEM, SOUTH CENTRAL ZONE 4204, NAD83, (2011 ADJUSTMENT). ALL COORDINATES AND DISTANCES ARE SURFACE VALUES AND MAY BE CONVERTED TO GRID BY APPLYING THE COMBINED SCALE FACTOR OF 0.999880935

2. ALL ELEVATIONS SHOWN ARE REFERENCED TO THE NORTH AMERICAN VERTICAL DATUM OF 1988 (NAVD88, 2001) FBC LIDAR DATUM.

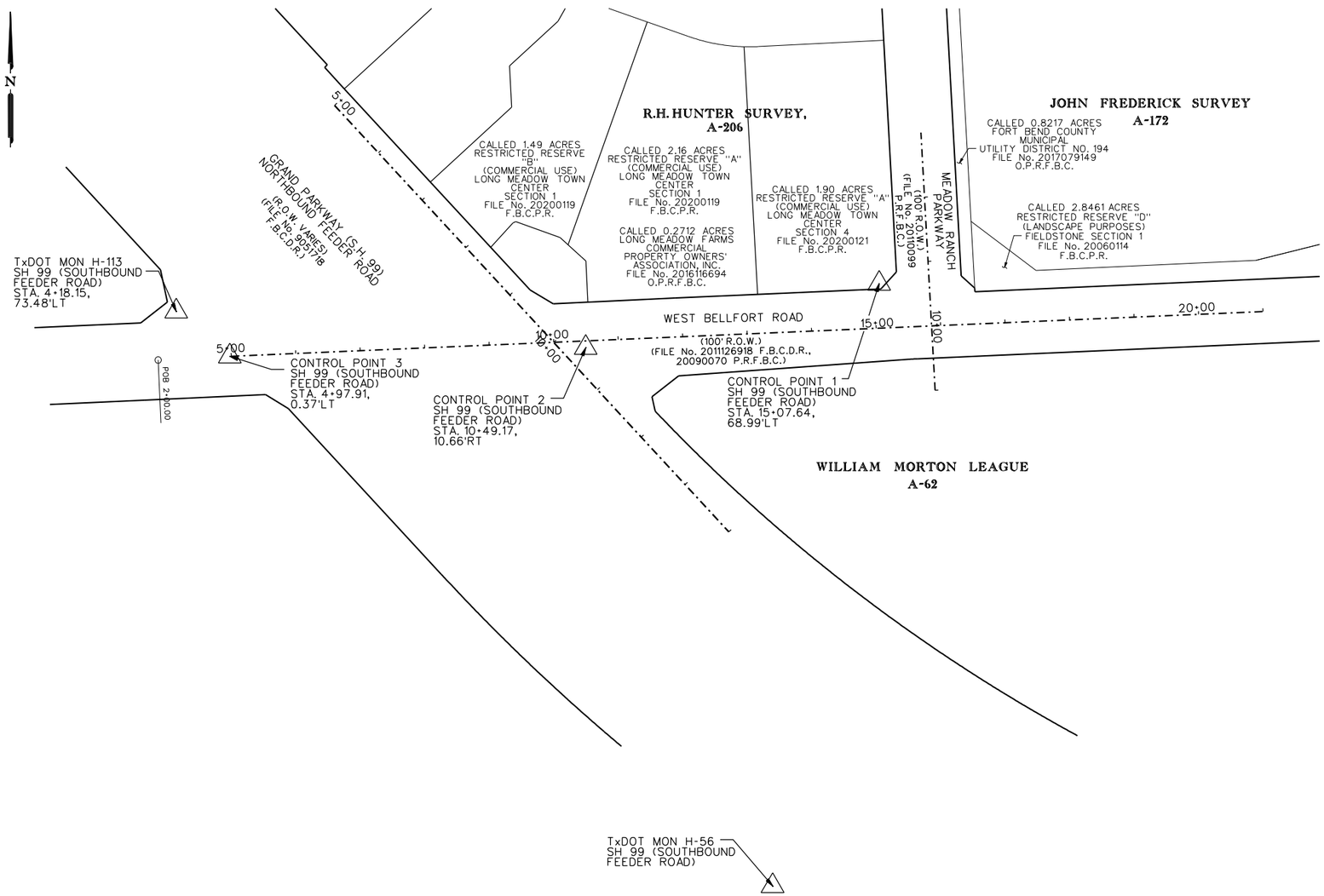

TxDOT MON. NO. 113 ELEVATION = 97.23'
TxDOT MON. NO. 56 ELEVATION = 96.56'
CONTROL POINT 1 ELEVATION = 98.87'
CONTROL POINT 2 ELEVATION = 97.33'
CONTROL POINT 3 ELEVATION = 98.00'

CONVENTIONAL SIGNS

EXIST ROW
BASELINE
MONUMENT

0 50 100 200 400

SCALE: 1"=100' (22" X 34" SHEET)
SCALE: 1"=200' (11" X 17" SHEET)

CONTROL TABLE (SURFACE)			
NO.	TYPE	N COORDINATE	E COORDINATE
H-113	3" ALUMINUM DISC	13,805,403.43	3,002,244.43
H-56	3" ALUMINUM DISC	13,804,512.82	3,003,168.19
CP-1	SET 1/2" I.R. W/ CAP	13,805,446.33	3,003,333.12
CP-2	SET 1/2" I.R. W/ CAP	13,805,346.81	3,002,878.54
CP-3	SET 1/2" I.R. W/ CAP	13,805,333.85	3,002,327.33

CONTROL TABLE (GRID)			
NO.	TYPE	N COORDINATE	E COORDINATE
H-113	3" ALUMINUM DISC	13,803,608.95	3,001,854.22
H-56	3" ALUMINUM DISC	13,802,718.47	3,002,777.83
CP-1	SET 1/2" I.R. W/ CAP	13,803,651.86	3,002,942.73
CP-2	SET 1/2" I.R. W/ CAP	13,803,552.35	3,002,488.22
CP-3	SET 1/2" I.R. W/ CAP	13,803,539.39	3,001,937.07

REV	DATE	BY	DESCRIPTION
1	12/21/21	LY	MOVED BASELINE TO MATCH ENGR.

STATE OF TEXAS REGISTERED WALTER P. SASS 4410 PROFESSIONAL LAND SURVEYOR

10/25/2021

WEISSER Engineering & Surveying
19500 Park Row, Suite 100 | Houston, Texas 77084
T.B.P.E. Reg. No. F-68 | T.B.P.L.S. Reg. No. 10194324
www.weisserengr.com | 281.579.7300

W. BELLFORT ROAD
SURVEY CONTROL SHEETS
FORT BEND COUNTY, TEXAS

SHEET 1 OF 1

DESIGNED BY:			DRAWN BY: WEC
CHECKED BY:			CHECKED BY:
CONT	SEC	JOB	HWY NO. SH99
			W. BELLFORT ROAD

FED. RD. DIV. NO.	PROJECT NO.		SHEET NO.
6			7
STATE	STATE DIST.	COUNTY	
TEXAS	12	FORT BEND	

FILE: $FILES$
DATE: $DATE$

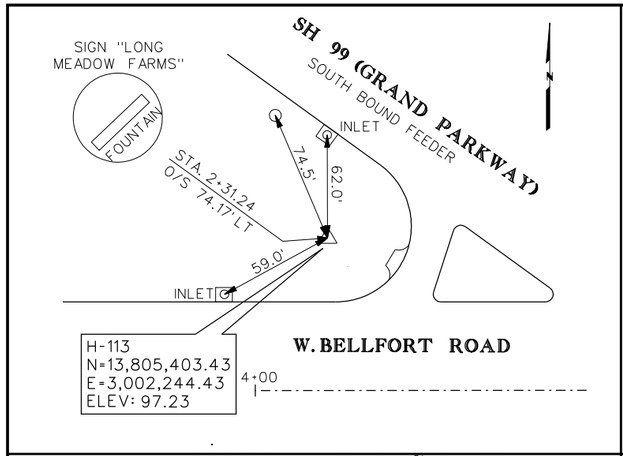

GENERAL LOCATION: H-113 FND 3" ALUMINUM DISK ON A ¾" IRON ROD AT THE INTERSECTION OF SH 99 WITH W. BELLFORT ROAD, NORTHWEST CORNER
SCALE: N.T.S.

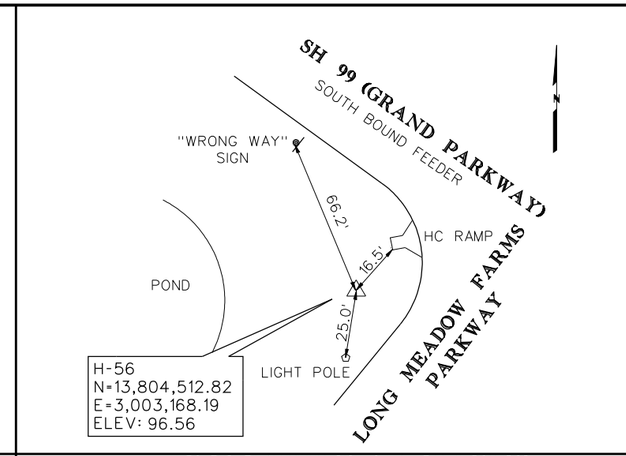

GENERAL LOCATION: H-56, FND 3" ALUMINUM DISK ON A 3/4 " IRON ROD, 0.7' BELOW GRADE, SW CORNER OF LONG MEADOW PKWY. @ SH 99
SCALE: N.T.S.

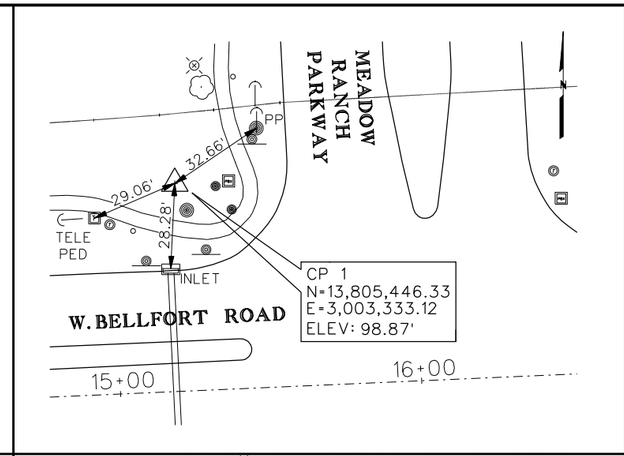

GENERAL LOCATION: CP-1, SET 1/2" I.R. W/ CAP, AT THE NORTHWEST CORNER OF THE INTERSECTION OF W. BELLFORT ROAD AND MEADOW RANCH PARWAY.
SCALE: N.T.S.

1. ALL COORDINATES AND BEARINGS SHOWN ARE BASED ON THE TEXAS COORDINATE SYSTEM, SOUTH CENTRAL ZONE 4204, NAD83, (2011 ADJUSTMENT). ALL COORDINATES AND DISTANCES ARE SURFACE VALUES AND MAY BE CONVERTED TO GRID BY APPLYING THE COMBINED SCALE FACTOR OF 0.999880935

2. ALL ELEVATIONS SHOWN ARE REFERENCED TO THE NORTH AMERICAN VERTICAL DATUM OF 1988 (NAVD88, 2001) FBC LIDAR DATUM.

TxDOT MON. NO. 113 ELEVATION = 97.23'
TxDOT MON. NO. 56 ELEVATION = 96.56'
CONTROL POINT 1 ELEVATION = 98.87'
CONTROL POINT 2 ELEVATION = 97.33'
CONTROL POINT 3 ELEVATION = 98.00'

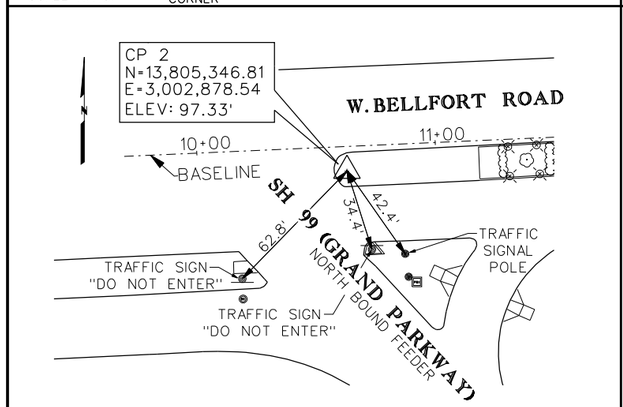

GENERAL LOCATION: CP-2, SET 1/2 " I.R. W/ CAP, W TIP OF ESPLANADE AT THE INTERSECTION OF W. BELLFORT ROAD AND SH 99 NORTH BOUND FEEDER ROAD.
SCALE: N.T.S.

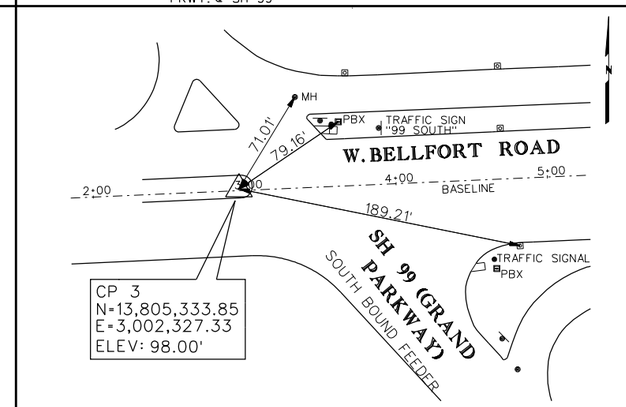

GENERAL LOCATION: CP-3, SET ½" I.R. W/ CAP, W TIP OF ESPLANADE AT THE INTERSECTION OF W. BELLFORT ROAD AND SH 99 SOUTH BOUND FEEDER ROAD.
SCALE: N.T.S.

CONVENTIONAL SIGNS

EXIST ROW
BASELINE
MONUMENT

0 50 100 200 400

SCALE: 1"=100' (22" X 34" SHEET)
SCALE: 1"=200' (11" X 17" SHEET)

REV	DATE	BY	DESCRIPTION

STATE OF TEXAS REGISTERED WALTER P. SASS 4410 PROFESSIONAL LAND SURVEYOR

10/25/2021

WEISSER Engineering & Surveying
19500 Park Row, Suite 100 | Houston, Texas 77084
T.B.P.E. Reg. No. F-68 | T.B.P.L.S. Reg. No. 10194374
www.weissereng.com | 281.579.7300

W. BELLFORT ROAD
SURVEY CONTROL SHEETS
FORT BEND COUNTY, TEXAS

SHEET 2 OF 2

DESIGNED BY:			DRAWN BY: WEC
CHECKED BY:			CHECKED BY:
CONT	SEC	JOB	HWY NO. SH99
			W. BELLFORT ROAD

FED. RD. DIV. NO.	PROJECT NO.		SHEET NO.
6			8
STATE	STATE DIST.	COUNTY	
TEXAS	12	FORT BEND	

FILE: $FILES$
DATE: $DATE$

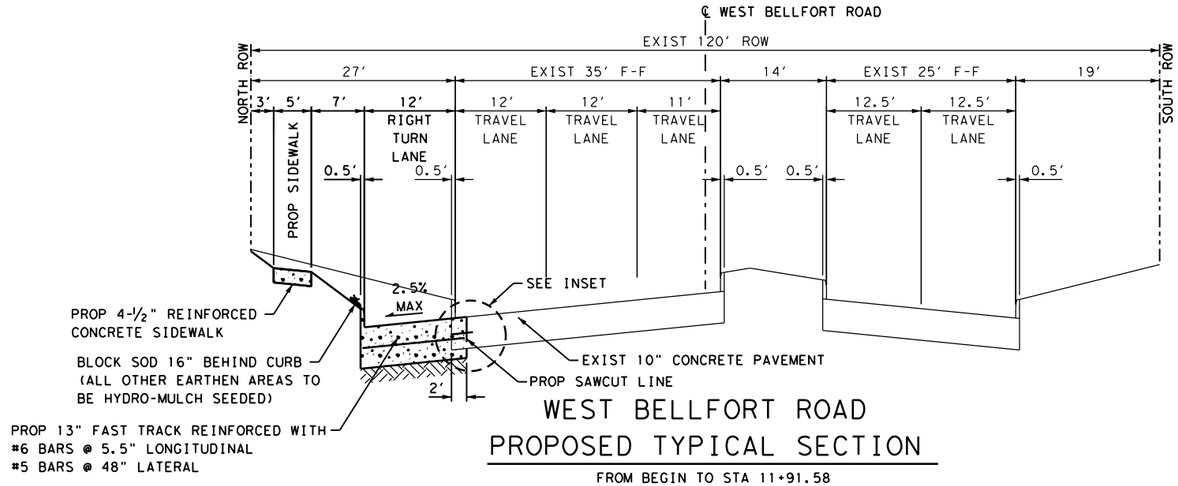

WEST BELLFORT ROAD
PROPOSED TYPICAL SECTION

FROM BEGIN TO STA 11+91.58

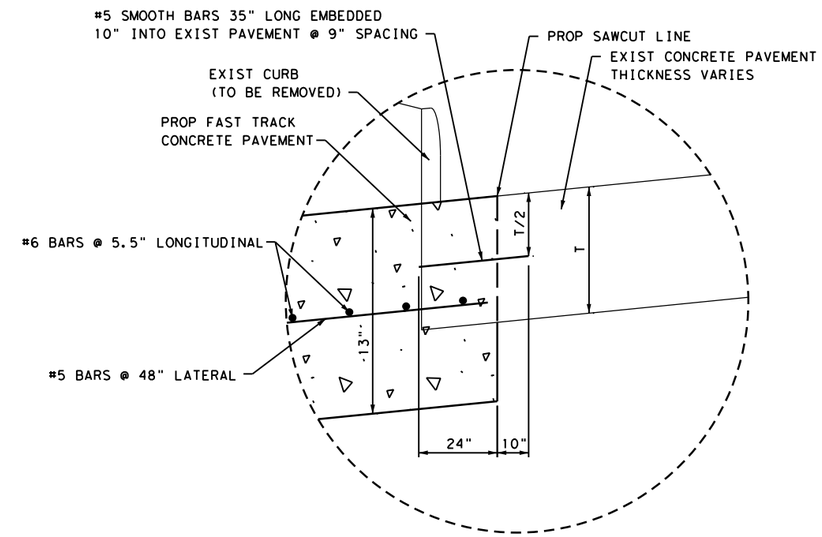

INSET

NTS

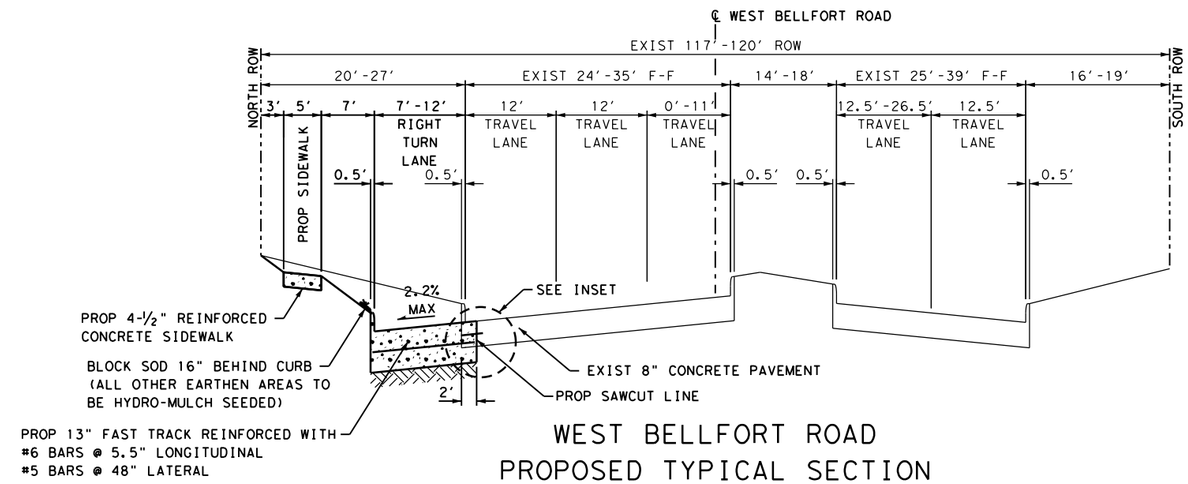

WEST BELLFORT ROAD
PROPOSED TYPICAL SECTION

FROM STA 11+91.58 TO STA 13+26.19

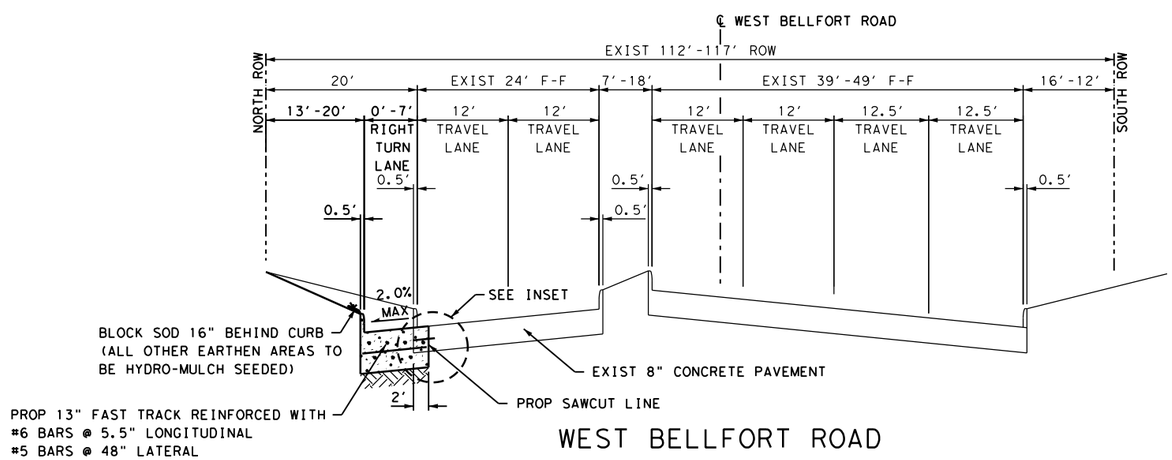

WEST BELLFORT ROAD
PROPOSED TYPICAL SECTION

FROM STA 13+26.19 TO END

STATE OF TEXAS
MAHMOUD SALEHI
89552
LICENSED
PROFESSIONAL ENGINEER

2/11/2022

No.	Date	Revisions	App.

THE STATE OF TEXAS
FORT BEND COUNTY

CobbFendley
TBPE Firm Registration No. 274
TBPLS Firm Registration No. 100467
22316 Grand Corner Drive, Suite 100
Katy, Texas 77494
713.462.3242 | fax 713.462.3262
www.cobbfendley.com

WEST BELLFORT ROAD
WESTBOUND LANES ONTO SH99

TYPICAL SECTIONS

SUBMITTED:	DESIGNED BY:
SCALE:	CC'D BY:
DATE: 2/11/2022	SHEET NO 9 OF 43 SHEETS
SURVEY: COBBFENDLEY	
CF JOB NO: 2111-002	

4:03:37 PM
2/11/2022
B:\Projects\2021\11002Ft+Bend+County+Engineering\03+West+Bellfort+Street+WB+lanes+onto+SH+99\400+CAD\411+Trans\02-General\211100203+TS01.dgn

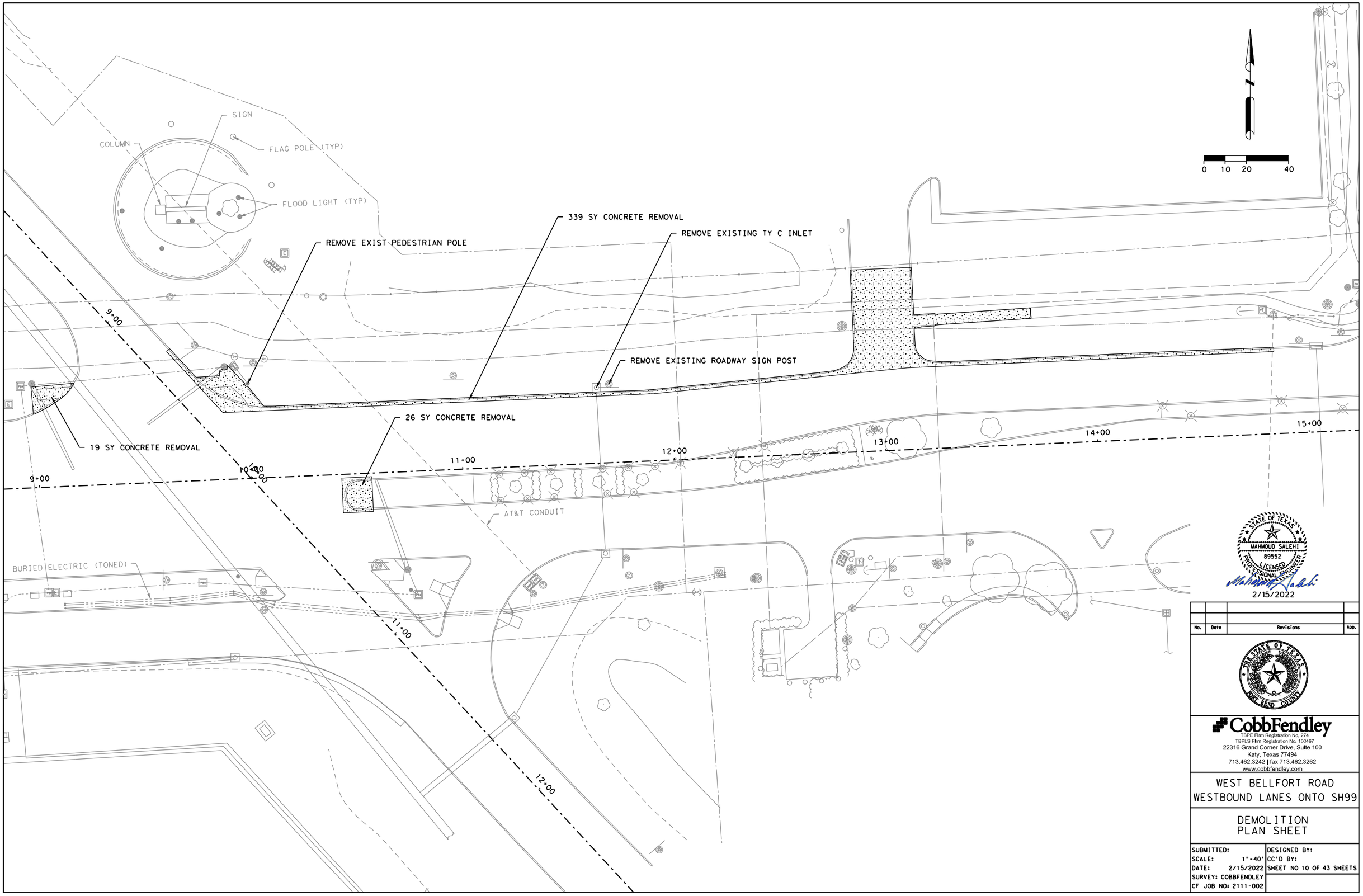

No.	Date	Revisions	App.

CobbFendley
TBPE Firm Registration No. 274
TBPLS Firm Registration No. 100467
22316 Grand Corner Drive, Suite 100
Katy, Texas 77494
713.462.3242 | fax 713.462.3262
www.cobbfendley.com

WEST BELLFORT ROAD
WESTBOUND LANES ONTO SH99

DEMOLITION
PLAN SHEET

SUBMITTED:	DESIGNED BY:
SCALE: 1"=40'	CC'D BY:
DATE: 2/15/2022	SHEET NO 10 OF 43 SHEETS
SURVEY: COBBFENDLEY	
CF JOB NO: 2111-002	

3:03:33 PM
2/15/2022
B:\Projects\2021\11002*Ft*Bend*County*Engineering\03*West*Belfort*Street*WB*lanes*onto*SH*99\400*CAD\411*Trans\07-Removal\211100203*DEM001.dgn

WEST BELLFORT ROAD

Beginning chain WBELLFORT description

Point 10	N 13,805,333.5667 E	3,002,329.4295 Sta	5+00.00

Course from 10 to 11 N 87° 30' 22.91" E Dist 1,600.0000

Point 11	N 13,805,403.1802 E	3,003,927.9144 Sta	21+00.00

Ending chain WBELLFORT description

SH 99 NBFR

Beginning chain SH99NBFR description

Point SHNBFR1	N 13,805,722.5634 E	3,002,489.6436 Sta	5+00.00

Course from SHNBFR1 to SHNBFR2 S 42° 44' 10.60" E Dist 900.0000

Point SHNBFR2	N 13,805,061.5269 E	3,003,100.4060 Sta	14+00.00

Ending chain SH99NBFR description

MEADOW RANCH PARKWAY

Beginning chain MEADOWRANCH description

Point 30	N 13,805,280.9693 E	3,003,419.9347 Sta	9+00.00

Course from 30 to 31 N 3° 08' 07.00" W Dist 400.0000

Point 31	N 13,805,680.3706 E	3,003,398.0573 Sta	13+00.00

Ending chain MEADOWRANCH description

STATE OF TEXAS
MAHMOUD SALEHI
89552
LICENSED
PROFESSIONAL ENGINEER

2/11/2022

No.	Date	Revisions	App.

THE STATE OF TEXAS
FORT BEND COUNTY

CobbFendley
TBPE Firm Registration No. 274
TBPLS Firm Registration No. 100467
22316 Grand Corner Drive, Suite 100
Katy, Texas 77494
713.462.3242 | fax 713.462.3262
www.cobbfendley.com

WEST BELLFORT ROAD
WESTBOUND LANES ONTO SH99

HORIZONTAL ALIGNMENT
DATA SHEET

SUBMITTED:	DESIGNED BY:
SCALE: N/A	CC'D BY:
DATE: 2/11/2022	SHEET NO 11 OF 43 SHEETS
SURVEY: COBBFENDLEY	
CF JOB NO: 2111-002	

4:03:39 PM
2/11/2022
B:\Projects\2021\11002-Ft-Bend-County-Engineering\03-West-Belfort-Street-WB-lanes-onto-SH-99\400-CAD\411-Trans\02-General\2111100203-HA01.dgn

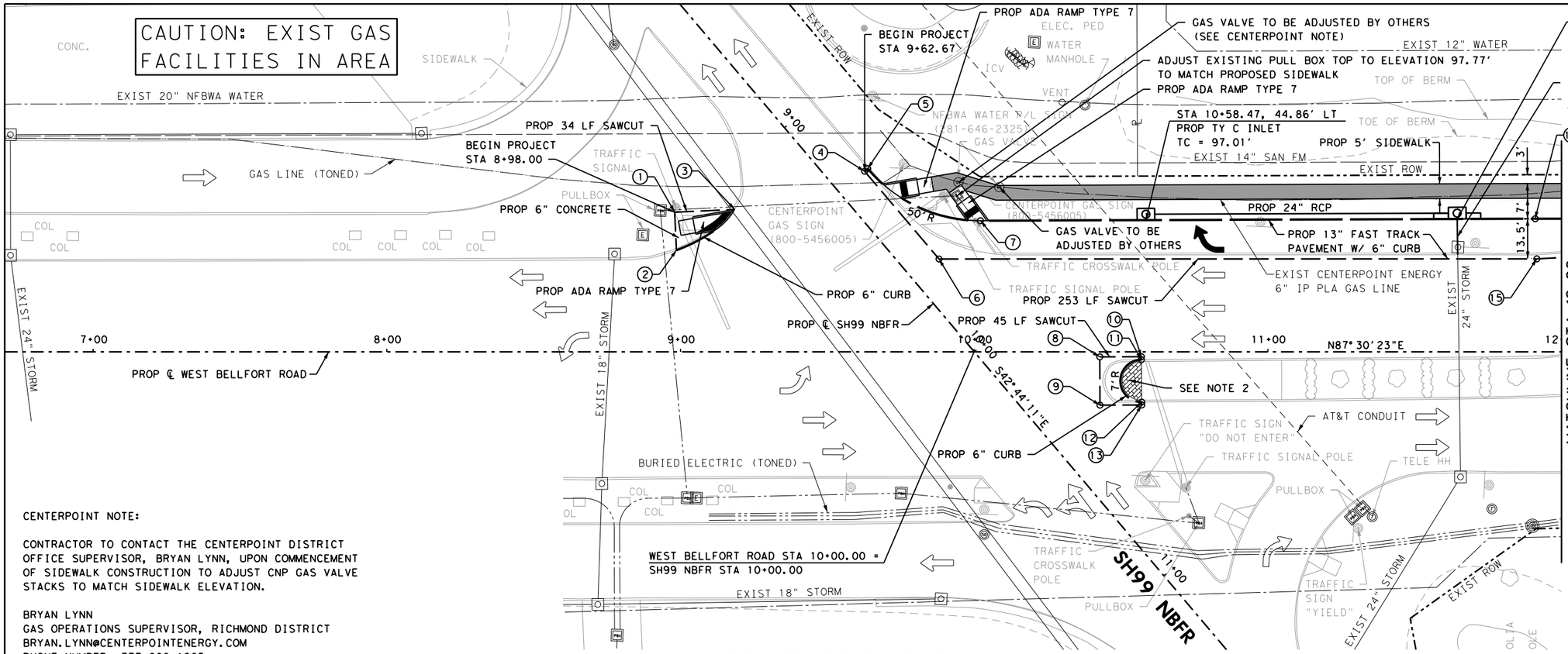

WEST BELLFORT ROAD

CENTERPOINT NOTE:

CONTRACTOR TO CONTACT THE CENTERPOINT DISTRICT OFFICE SUPERVISOR, BRYAN LYNN, UPON COMMENCEMENT OF SIDEWALK CONSTRUCTION TO ADJUST CNP GAS VALVE STACKS TO MATCH SIDEWALK ELEVATION.

BRYAN LYNN
GAS OPERATIONS SUPERVISOR, RICHMOND DISTRICT
BRYAN.LYNN@CENTERPOINTENERGY.COM
PHONE NUMBER: 777-800-1905

NOTES:

1. SEE DEMOLITION PLAN SHEET FOR REMOVAL LIMITS OF EXISTING ITEMS.
2. CONTRACTOR TO REMOVE AND REINSTALL EXISTING BRICK PAVERS WITHIN MEDIAN.

	STATION	OFFSET
1	8+98.00	47.55' LT
2	8+98.61	34.60' LT
3	9+18.44	48.52' LT
4	9+62.67	61.51' LT
5	9+63.73	62.41' LT
6	9+88.01	31.57' LT
7	10+02.12	44.66' LT
8	10+42.75	1.77' RT
9	10+42.82	18.19' RT
10	10+56.96	1.71' RT
11	10+56.96	2.71' RT
12	10+57.03	17.13' RT
13	10+57.03	18.13' RT
14	11+91.01	45.33' LT
15	11+91.58	31.63' LT

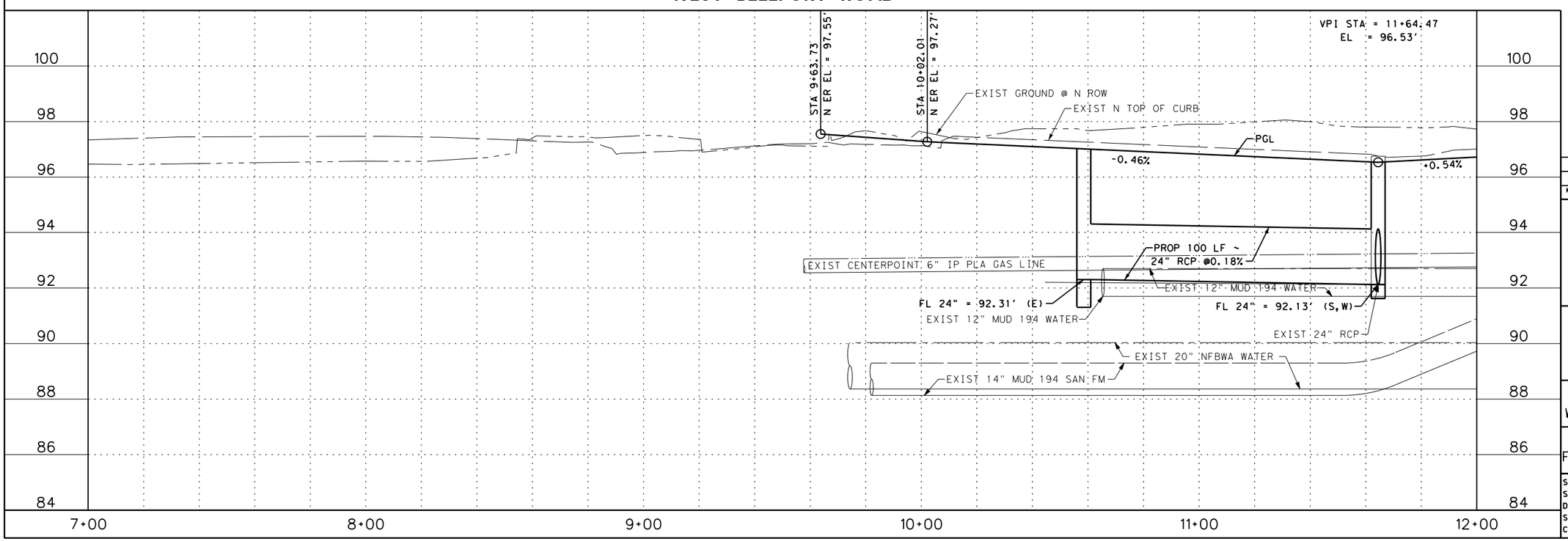

STATE OF TEXAS
MAHMOUD SALEHI
89552
LICENSED PROFESSIONAL ENGINEER
2/17/2022

No.	Date	Revisions	App.

THE STATE OF TEXAS
FORT BEND COUNTY

CobbFendley
TBPE Firm Registration No. 274
TBPLS Firm Registration No. 100467
22316 Grand Corner Drive, Suite 100
Katy, Texas 77494
713.462.3242 | fax 713.462.3262
www.cobbfendley.com

WEST BELLFORT ROAD
WESTBOUND LANES ONTO SH99

PLAN AND PROFILE
FROM BEGIN TO STA 12+00

SUBMITTED:	DESIGNED BY:
SCALE: 1"=20'	CC'D BY:
DATE: 2/17/2022	SHEET NO 12 OF 43 SHEETS
SURVEY: COBBFENDLEY	
CF JOB NO: 2111-002	

4:29:10 PM
2/17/2022
B:\Projects\2021\11002+Ft+Bend+County+Engineering\03+West+Belfort+Street+WB+lanes+onto+SH+99\400+CAD\411+Trans\03-Roadway\211100203+PP+01.dgn

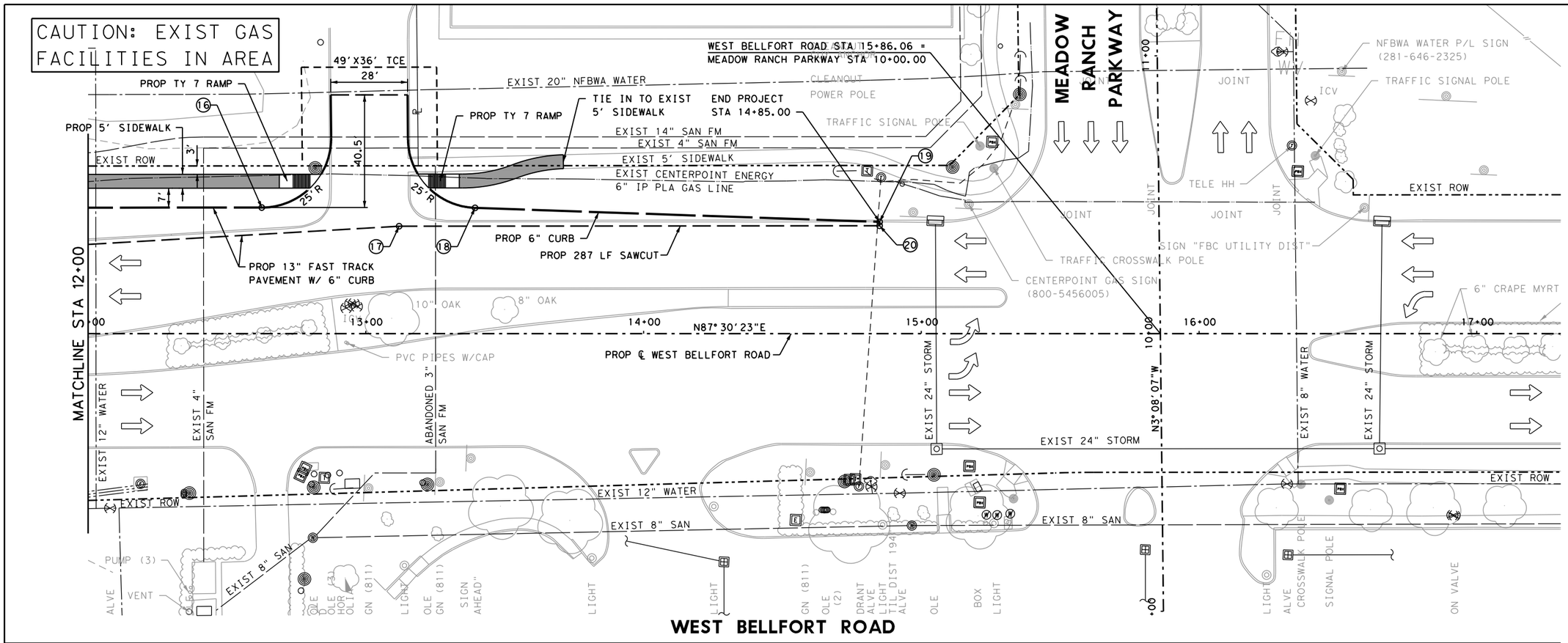

NOTES:

1. SEE DEMOLITION PLAN SHEET FOR REMOVAL LIMITS OF EXISTING ITEMS.

	STATION	OFFSET
16	12+62.53	45.37' LT
17	13+11.95	38.67' LT
18	13+39.30	45.27' LT
19	14+85.00	40.22' LT
20	14+85.00	38.81' LT

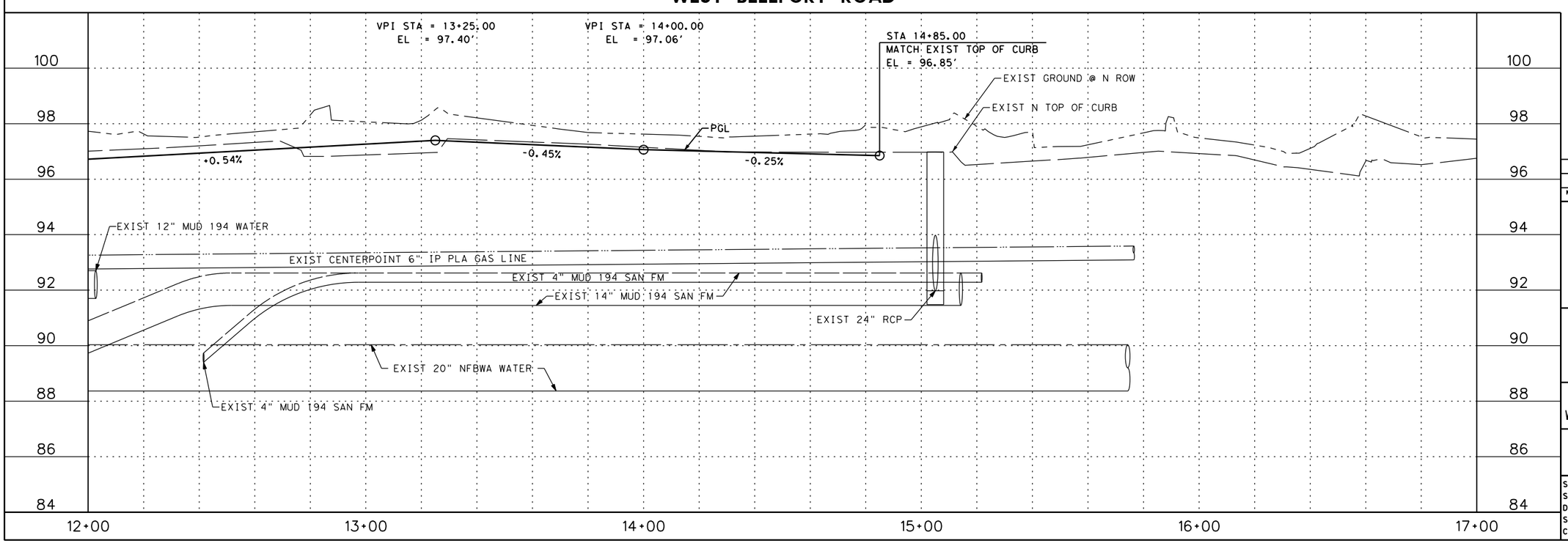

STATE OF TEXAS
MAHMOUD SALEHI
89552
LICENSED PROFESSIONAL ENGINEER
2/15/2022

No.	Date	Revisions	App.

THE STATE OF TEXAS
FORT BEND COUNTY

CobbFendley
TBPE Firm Registration No. 274
TBPLS Firm Registration No. 100467
22316 Grand Corner Drive, Suite 100
Katy, Texas 77494
713.462.3242 | fax 713.462.3262
www.cobbfendley.com

WEST BELLFORT ROAD
WESTBOUND LANES ONTO SH99

PLAN AND PROFILE
FROM STA 12+00 TO END

SUBMITTED:	DESIGNED BY:
SCALE: 1"=20'	CC'D BY:
DATE: 2/15/2022	SHEET NO 13 OF 43 SHEETS
SURVEY: COBBFENDLEY	
CF JOB NO: 2111-002	

3:03:34 PM
2/15/2022
B:\Projects\2021\11002*Ft*Bend*County*Engineering\03*West*Bellfort*Street*WB*Jones*onto*SH*99\400*CAD\411*Trans\03-Roadway\211100203*PP*02.dgn

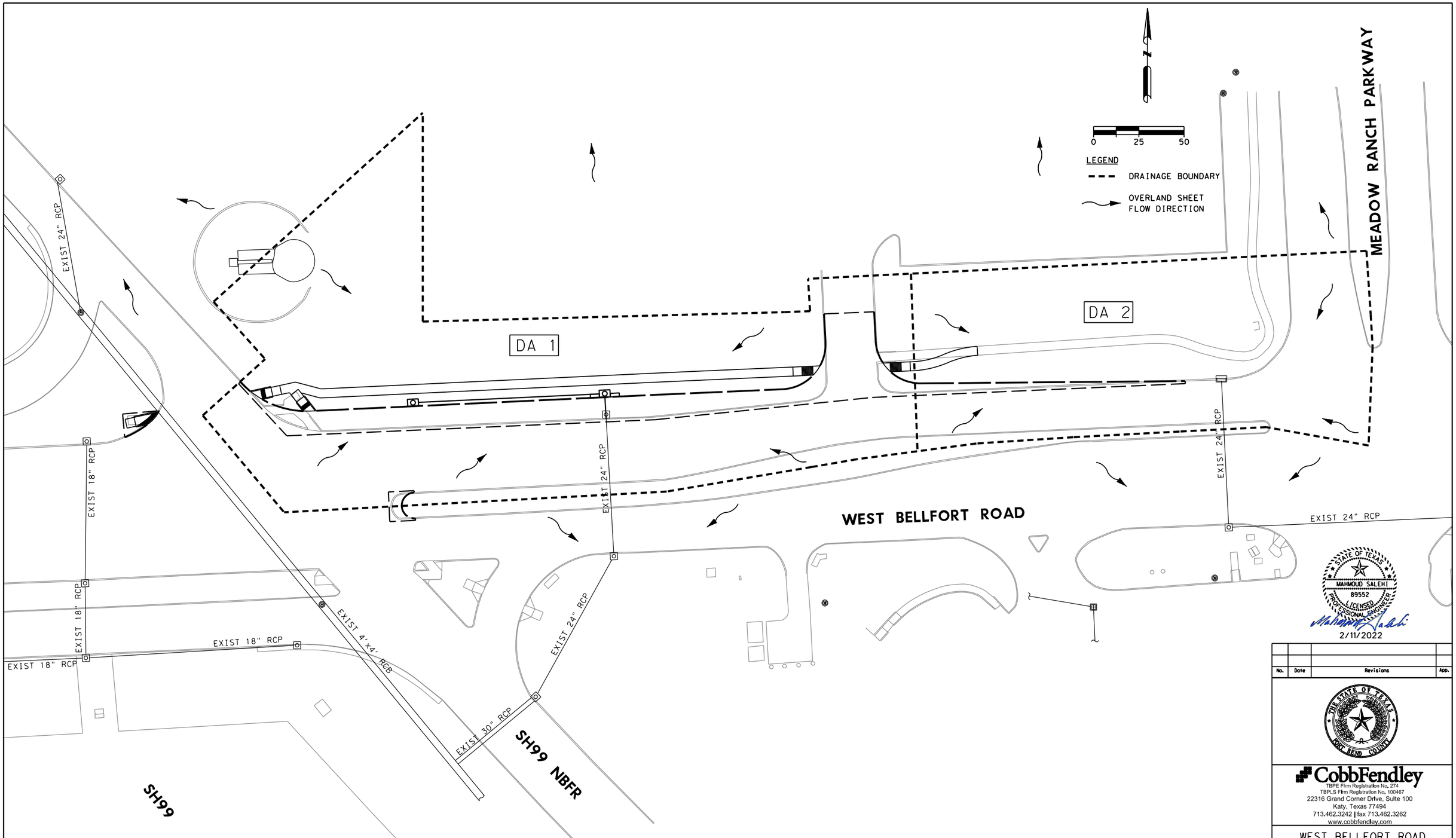

EXISTING DRAINAGE CALCULATIONS

Drainage Area	Area (acre)	C	tc (min)	I (in/hr)				Q (cfs)			
				2-year	10-year	25-year	100-year	2-year	10-year	25-year	100-year
DA 1	1.01	0.45	10	5.65	8.04	9.54	12.09	2.57	3.65	4.34	5.5
DA 2	0.56	0.47	10	5.65	8.04	9.54	12.09	1.48	2.1	2.75	3.95

PROPOSED DRAINAGE CALCULATIONS

Drainage Area	Area (acre)	C	tc (min)	I (in/hr)				Q (cfs)			
				2-year	10-year	25-year	100-year	2-year	10-year	25-year	100-year
DA 1	1.01	0.52	10	5.65	8.04	9.54	12.09	2.97	4.22	5.01	6.35
DA 2	0.56	0.49	10	5.65	8.04	9.54	12.09	1.55	2.21	2.89	4.16

EFFECTS OF CHANGE

	INCREASE IN FLOW, CFS				INCREASE IN DETENTION VOLUME	INCREASE IN IMPERVIOUS AREA
DA	2-year	10-year	25-year	100-year	ac-ft	ac
1	0.4	0.57	0.68	0.85	0.05	0.12
2	0.08	0.11	0.14	0.2	0.01	0.02

STATE OF TEXAS
MAHMOUD SALEHI
89552
LICENSED
PROFESSIONAL ENGINEER
2/11/2022

No.	Date	Revisions	App.

THE STATE OF TEXAS
FORT BEND COUNTY

CobbFendley
TBPE Firm Registration No. 274
TBPLS Firm Registration No. 100467
22316 Grand Corner Drive, Suite 100
Katy, Texas 77494
713.462.3242 | fax 713.462.3262
www.cobbfendley.com

WEST BELLFORT ROAD
WESTBOUND LANES ONTO SH99

DRAINAGE AREA MAP

SUBMITTED:
SCALE:
DATE: 2/11/2022
SURVEY: COBBFENDLEY
CF JOB NO: 2111-002
DESIGNED BY:
CC'D BY:
SHEET NO 14 OF 43 SHEETS

4:03:40 PM
2/11/2022
B:\Projects\2021\11002*Ft*Bend*County*Engineering\03*West*Belfort*Street*WB*lanes*onto*SH*99\400*CAD\411*Trans\05-Drainage\202111002D3*DAM01.dgn

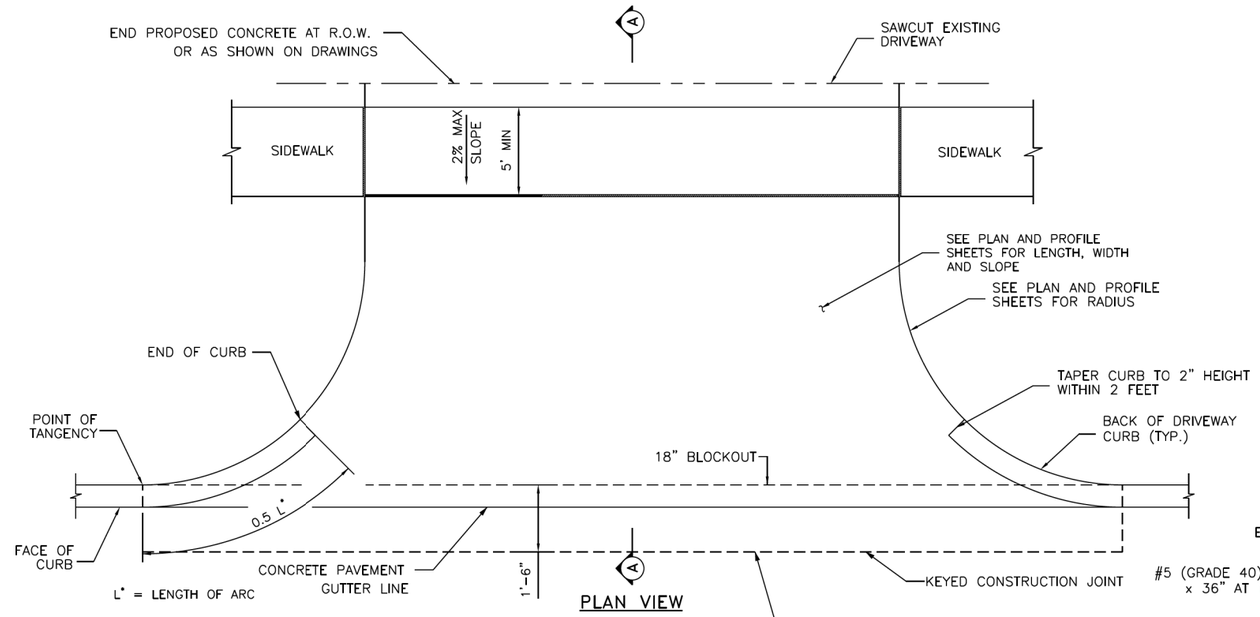

PLAN VIEW

NOTES:

1. SAWCUT EXISTING DRIVEWAY AT R.O.W. LINE OR AS SHOWN ON DRAWING AND REMOVE EXISTING DRIVEWAY TO SAWCUT LINE.
2. IF THERE IS EXISTING CURB ON DRIVEWAY, CONNECT PROPOSED CURB TO EXISTING CURB; OTHERWISE TAPER CURB HEIGHT AS SHOWN.
3. SEE PAVEMENT DETAIL SHEET FOR CONCRETE CURB REINFORCEMENT.
4. THIS DRIVEWAY INSTALLATION IS GOVERNED BY HARRIS COUNTY ITEM 360.

MINIMUM RADII REQUIREMENTS – DRIVEWAYS

	LOCAL	COLLECTOR/MAJOR
RESIDENTIAL	5'	–
COMMERCIAL	10'	25'

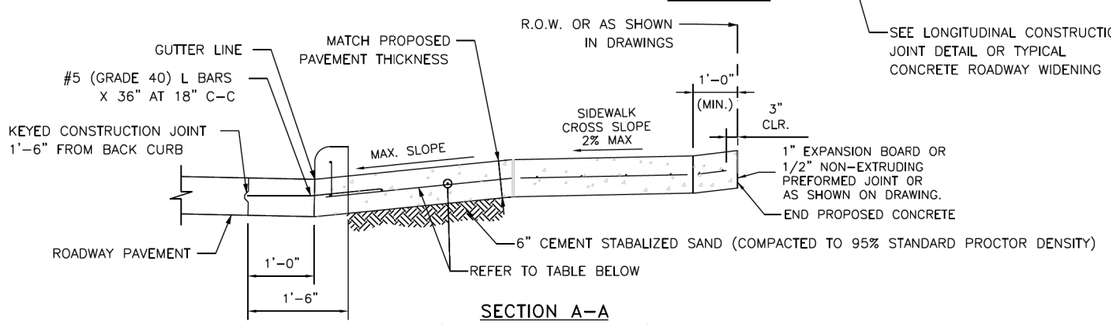

SECTION A–A
(DRIVEWAY SLOPES TO ROADWAY)

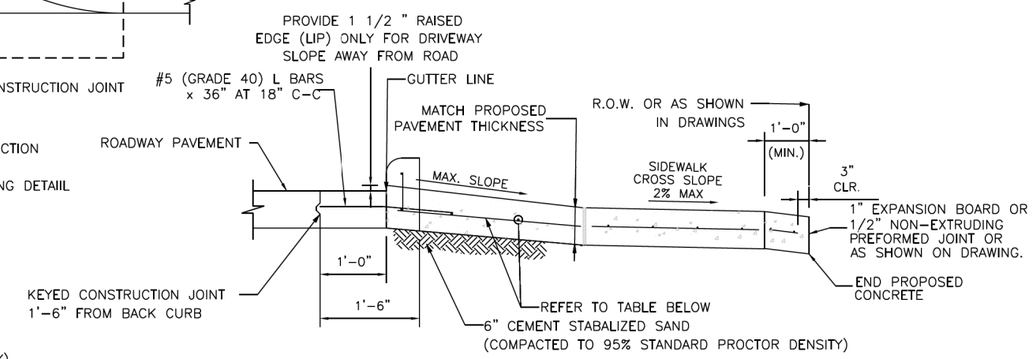

SECTION A–A
(DRIVEWAY SLOPES AWAY FROM ROADWAY)

DRIVEWAY DESIGN DATA FOR CLARITY

DRIVEWAY LOCATIONS				DRIVEWAY DIMENSIONS										
DRIVEWAY NO.	STREET NAME	CENTER LINE STATION	OFFSET	RADIUS (FT)	"A" (FT)	"B" (FT)	"C" (FT)	TOTAL LENGTH	GUTTER ELEV. (FT)	1.5" LIP	ROW ELEV. (FT)	TIE IN ELEV. (FT)	SLOPE (%)	TCE (L x W) (FT X FT)
1	WEST BELLFORT	13+01.20	LT	25	28	15.00	25.53	40.53	96.77	YES	98.06	99.00	6.0%	36'X48'

	PAVEMENT THICKNESS	COLLECTOR/MAJOR	RESIDENTIAL (MAJOR THOROUGHFARE)	RESIDENTIAL (COLLECTORS AND LOCAL STREETS)
REINFORCEMENT	6"	#4 @ 24" O.C.E.W.	N/A	#4 @ 24" O.C.E.W.
	7"	#4 @ 24" O.C.E.W.	#4 @ 24" O.C.E.W.	#4 @ 24" O.C.E.W.
	8"	#4 @ 18" O.C.E.W.	#4 @ 18" O.C.E.W.	#4 @ 18" O.C.E.W.
	9"–10"	#5 @ 18" O.C.E.W.	#5 @ 18" O.C.E.W.	#5 @ 18" O.C.E.W.
EXPANSION DOWEL JOINT	6"	3/4" DIA. SMOOTH BAR	3/4" DIA. SMOOTH BAR	3/4" DIA. SMOOTH BAR
	7"	1" DIA. SMOOTH BAR	1" DIA. SMOOTH BAR	1" DIA. SMOOTH BAR
	8"	1" DIA. SMOOTH BAR	1" DIA. SMOOTH BAR	1" DIA. SMOOTH BAR
	9"–10"	1¼" DIA. SMOOTH BAR	1¼" DIA. SMOOTH BAR	1¼" DIA. SMOOTH BAR
CONSTRUCTION JOINT DOWEL	ALL	#5 REBAR	#5 REBAR	#5 REBAR
SUBGRADE	ALL	6" CEMENT–STABALIZED SAND	2" BANK SAND	2" BANK SAND
RUNNING SLOPE	ALL	2% TO 4%	2% TO 6%	2% TO 10%*

*10% ALLOWABLE ON PRIVATELY CONSTRUCTED PROJECTS
6% MAX ON PUBLIC PROJECTS

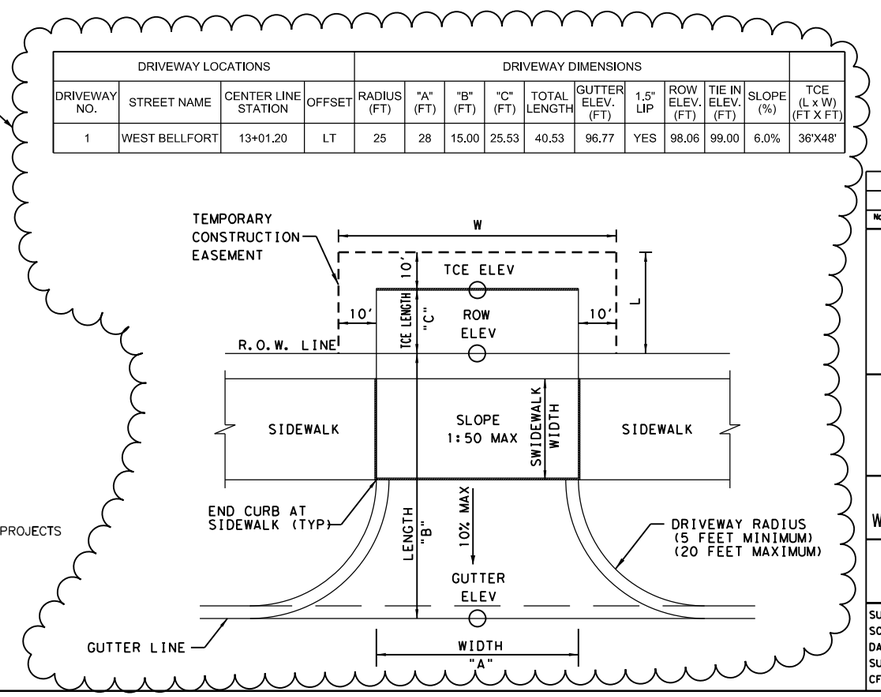

STATE OF TEXAS
MAHMOUD SALEHI
89552
LICENSED
PROFESSIONAL ENGINEER
2/11/2022

No.	Date	Revisions	App.

THE STATE OF TEXAS
FORT BEND COUNTY

CobbFendley
TBPE Firm Registration No. 274
TBPLS Firm Registration No. 100467
22316 Grand Corner Drive, Suite 100
Katy, Texas 77494
713.462.3242 | fax 713.462.3262
www.cobbfendley.com

WEST BELLFORT ROAD
WESTBOUND LANES ONTO SH99

DRIVEWAY DETAILS FOR
MAJOR ROADWAY
CONSTRUCTION

SUBMITTED:	DESIGNED BY:
SCALE: N/A	CC'D BY:
DATE: 2/11/2022	SHEET NO 15 OF 43 SHEETS
SURVEY: COBBFENDLEY	
CF JOB NO: 2111-002	

4:03:40 PM
2/11/2022
B:\Projects\2021\11002*Ft*Bend*County*Engineering\03*West*Belfort*Street*WB*lanes*onto*SH*99\400*CAD\411*Trans\11-Details\211100203*DRIVEDET01.dgn

DISCLAIMER:
The use of this standard is governed by the "Texas Engineering Practice Act". No warranty of any kind is made by TxDOT for any purpose whatsoever. TxDOT assumes no responsibility for the conversion of this standard to other formats or for incorrect results or damages resulting from its use.

TABLE NO. 1 LONGITUDINAL STEEL					
SLAB THICKNESS AND BAR SIZE		REGULAR STEEL BARS	FIRST SPACING AT EDGE OR JOINT	ADDITIONAL STEEL BARS AT TRANSVERSE CONSTRUCTION JOINT (SECTION X-X)	
T (IN.)	BAR SIZE	SPACING C (IN.)	SPACING a (IN.)	SPACING 2 x C (IN.)	LENGTH L (IN.)
7.0	#5	6.5	3 TO 4	13	50
7.5	#5	6.0	3 TO 4	12	50
8.0	#6	9.0	3 TO 4	18	50
8.5	#6	8.5	3 TO 4	17	50
9.0	#6	8.0	3 TO 4	16	50
9.5	#6	7.5	3 TO 4	15	50
10.0	#6	7.0	3 TO 4	14	50
10.5	#6	6.75	3 TO 4	13.5	50
11.0	#6	6.5	3 TO 4	13	50
11.5	#6	6.25	3 TO 4	12.5	50
12.0	#6	6.0	3 TO 4	12	50
12.5	#6	5.75	3 TO 4	11.5	50
13.0	#6	5.5	3 TO 4	11	50

TABLE NO. 2 TRANSVERSE STEEL AND TIE BARS						
SLAB THICKNESS (IN.)	TRANSVERSE STEEL		TIE BARS AT LONGITUDINAL CONTRACTION JOINT (SECTION Z-Z)		TIE BARS AT LONGITUDINAL CONSTRUCTION JOINT (SECTION Y-Y)	
	BAR SIZE	SPACING (IN.)	BAR SIZE	SPACING (IN.)	BAR SIZE	SPACING (IN.)
7.0 - 7.5	#5	48	#5	48	#5	24
8.0 - 13.0	#5	48	#6	48	#6	24

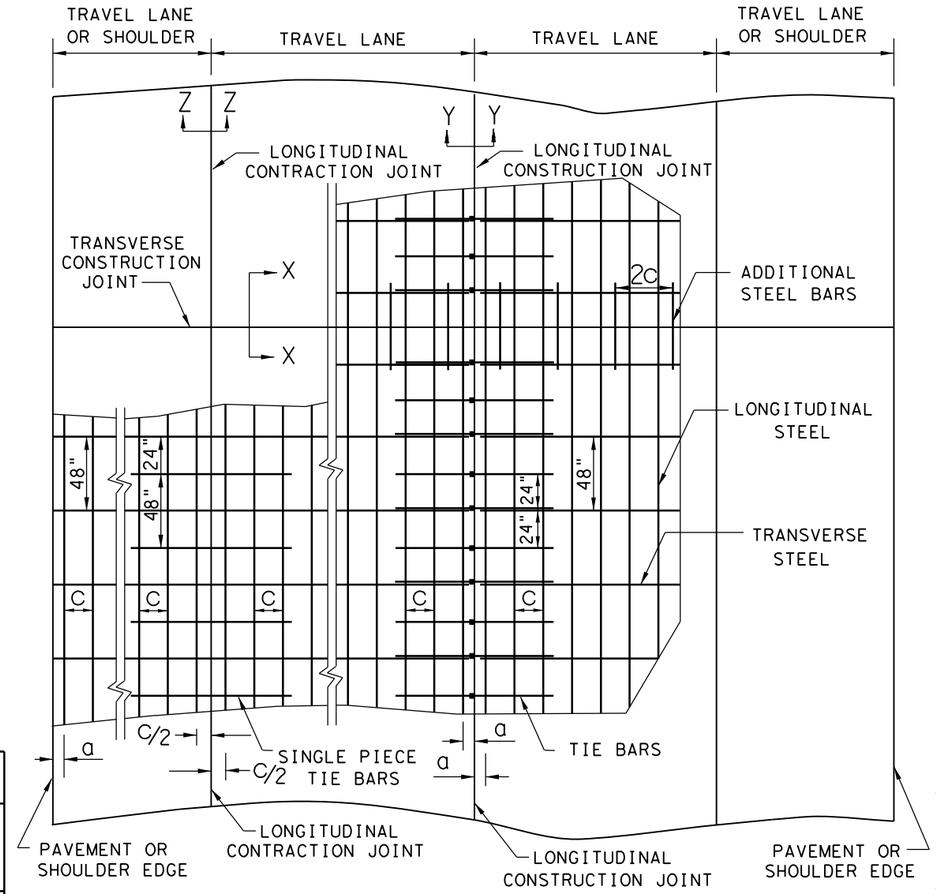

TYPICAL PAVEMENT LAYOUT

PLAN VIEW (NOT TO SCALE)

GENERAL NOTES

1. DETAILS FOR PAVEMENT WIDTH, PAVEMENT THICKNESS AND THE CROWN CROSS-SLOPE SHALL BE SHOWN ELSEWHERE IN THE PLANS. PAVEMENTS WIDER THAN 100 FT. WITHOUT A FREE LONGITUDINAL JOINT ARE NOT COVERED BY THIS STANDARD.
2. USE COARSE AGGREGATES WITH A RATED COEFFICIENT OF THERMAL EXPANSION (CoTE) OF NOT MORE THAN 5.5 X 10^{-6} IN/IN/ °F AS LISTED IN THE CONCRETE RATED SOURCE QUALITY CATALOG (CRSQC).
3. ALL THE REINFORCING STEEL AND TIE BARS SHALL BE DEFORMED STEEL BARS CONFORMING TO ASTM A 615 (GRADE 60) OR ASTM A 996 (GRADE 60) OR ABOVE. STEEL BAR SIZES AND SPACINGS SHALL CONFORM TO TABLE NO.1 AND TABLE NO.2.
4. STEEL BAR PLACEMENT TOLERANCE SHALL BE +/- 1 IN. HORIZONTALLY AND +/- 0.5 IN. VERTICALLY. CALCULATED AVERAGE BAR SPACING (CONCRETE PLACEMENT WIDTH / NUMBER OF LONGITUDINAL BARS) SHALL CONFORM TO TABLE NO.1
5. PAVEMENT WIDTHS OF MORE THAN 15 FT. SHALL HAVE A LONGITUDINAL JOINT (SECTION Z-Z OR SECTION Y-Y). THESE JOINTS SHALL BE LOCATED WITHIN 6 IN. OF THE LANE LINE UNLESS THE JOINT LOCATION IS SHOWN ELSEWHERE ON THE PLANS.
6. THE SAW CUT DEPTH FOR THE LONGITUDINAL CONTRACTION JOINT (SECTION Z-Z) SHALL BE ONE THIRD OF THE SLAB THICKNESS (T/3).
7. WHEN TYING CONCRETE GUTTER AT A LONGITUDINAL JOINT, THE TIE BAR LENGTH OR POSITION MAY BE ADJUSTED. PROVIDE 3 IN. OF CONCRETE COVER FROM THE BACK OF GUTTER TO THE END OF TIE BAR.
8. REPLACE MISSING OR DAMAGED TIE BARS WITHOUT ADDITIONAL COMPENSATION BY DRILLING MIN.10 IN. DEEP AND GROUTING TIE BARS WITH TYPE III, CLASS C EPOXY. MEET THE PULL-OUT TEST REQUIREMENTS IN ITEM 361.
9. OMIT TIE BARS LOCATED WITHIN 18-IN. OF THE TRANSVERSE CONSTRUCTION JOINTS (SECTION X-X). USE HAND-OPERATED IMMERSION VIBRATORS TO CONSOLIDATE THE CONCRETE ADJACENT TO ALL FORMED JOINTS.
10. LONGITUDINAL REINFORCING STEEL SPLICES SHALL BE A MINIMUM OF 25 IN. STAGGER THE LAP LOCATIONS SO THAT NO MORE THAN 1/3 OF THE LONGITUDINAL STEEL IS SPLICED IN ANY GIVEN 12-FT. WIDTH AND 2-FT. LENGTH OF THE PAVEMENT.
11. THE DETAIL FOR THE JOINT SEALANT AND RESERVOIR IS SHOWN ON STANDARD SHEET "CONCRETE PAVING DETAILS, JOINT SEALS."

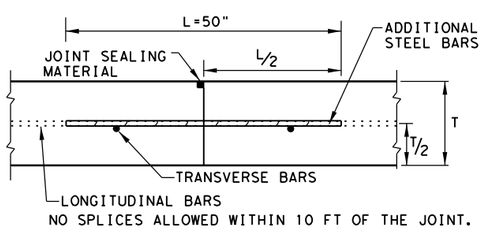

TRANSVERSE CONSTRUCTION JOINT

SECTION X - X

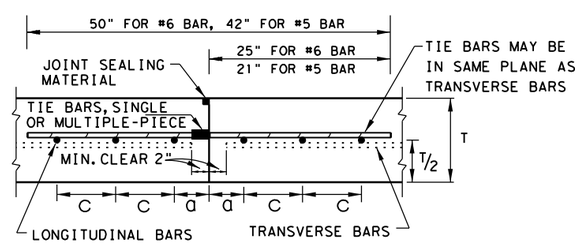

LONGITUDINAL CONSTRUCTION JOINT

SECTION Y - Y

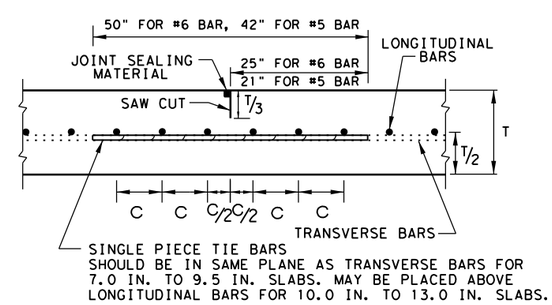

LONGITUDINAL CONTRACTION JOINT

SECTION Z - Z

SHEET 1 OF 2

Texas Department of Transportation — Design Division Standard

CONTINUOUSLY REINFORCED CONCRETE PAVEMENT

ONE LAYER STEEL BAR PLACEMENT T - 7 to 13 INCHES

CRCP(1)-20

FILE: crcp120.dgn	DN: TxDOT	CK:KM	DW: AN	CK:VP
© TxDOT: APRIL 2020	CONT	SECT	JOB	HIGHWAY
REVISIONS 10/10/2011 ADD GN #12; 04/09/2013 REMOVE 6" AND 6.5" ADD CTE REQUIREMENTS; 05/05/2017 CoTE AS RATED 4.3	DIST	COUNTY		SHEET NO. 16

DATE:
FILE:

DISCLAIMER:
The use of this standard is governed by the "Texas Engineering Practice Act". No warranty of any kind is made by TxDOT for any purpose whatsoever. TxDOT assumes no responsibility for the conversion of this standard to other formats or for incorrect results or damages resulting from its use.

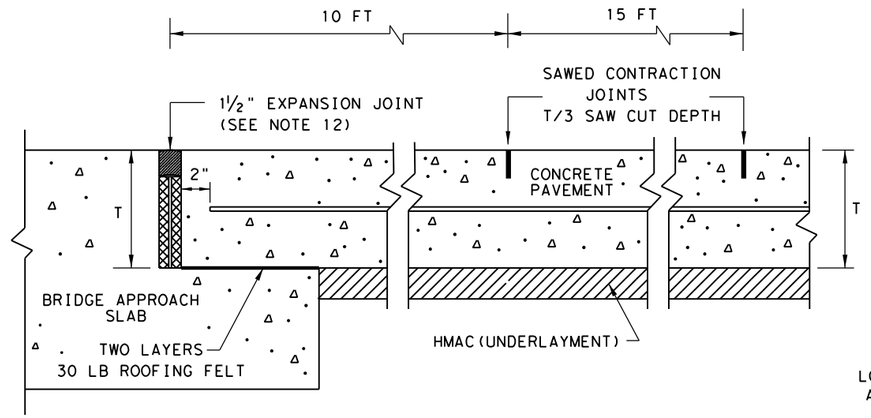

TRANSVERSE EXPANSION JOINT DETAIL
AT BRIDGE APPROACH

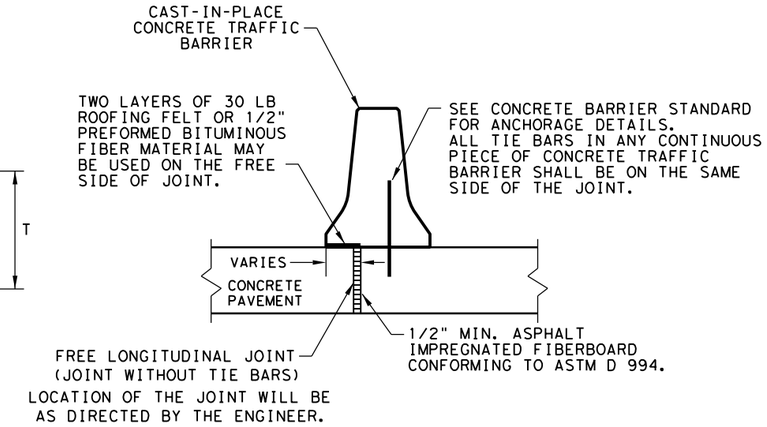

FREE LONGITUDINAL JOINT DETAIL

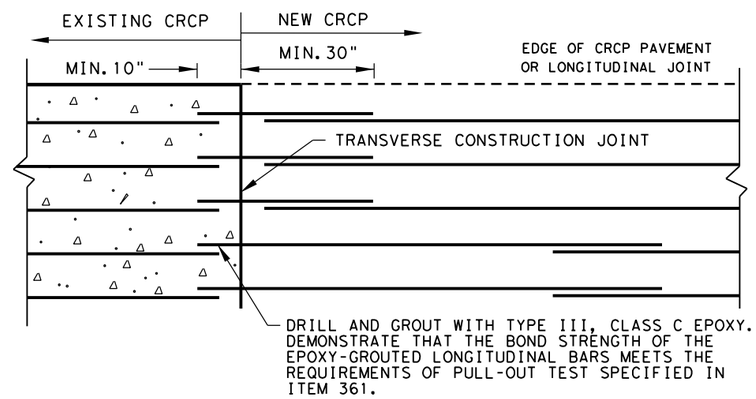

OPTION A: DRILL AND EPOXY
PLAN VIEW (NOT TO SCALE)

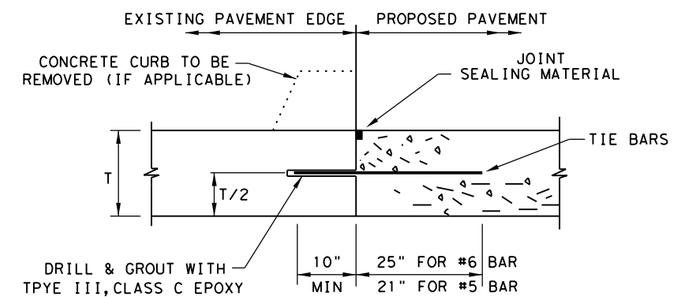

1. BEFORE WIDENING WORK, DEMONSTRATE THAT THE BOND STRENGTH OF THE EPOXY-GROUTED TIE BARS MEETS THE REQURIMENTS OF PULL-OUT TEST SPECIFIED IN ITEM 361.
2. SPACE TIE BARS AT 24" SPACING. USE #6 TIE BARS FOR 8" AND THICKER SLABS, USE #5 TIE BARS FOR LESS THAN 8" THICK SLABS.

LONGITUDINAL WIDENING JOINT DETAIL

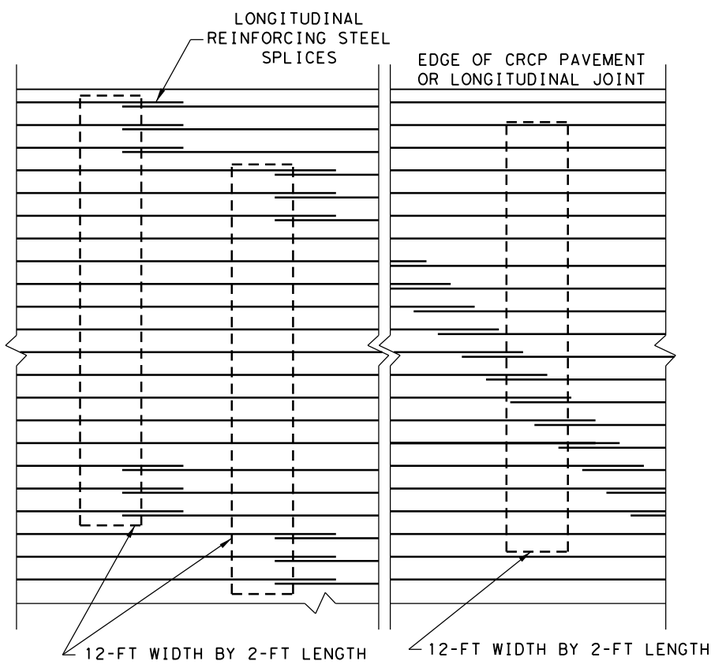

STAGGER THE LAP LOCATIONS SO THAT NO MORE THAN 1/3 OF THE LONGITUDINAL STEEL IS SPLICED IN ANY GIVEN 12-FT. WIDTH AND 2-FT. LENGTH OF THE PAVEMENT. ANY OTHER LAP CONFIGURATION MEETING THIS REQUIREMENT WILL BE ALLOWED.

EXAMPLES OF LAP CONFIGURATION
PLAN VIEW (NOT TO SCALE)

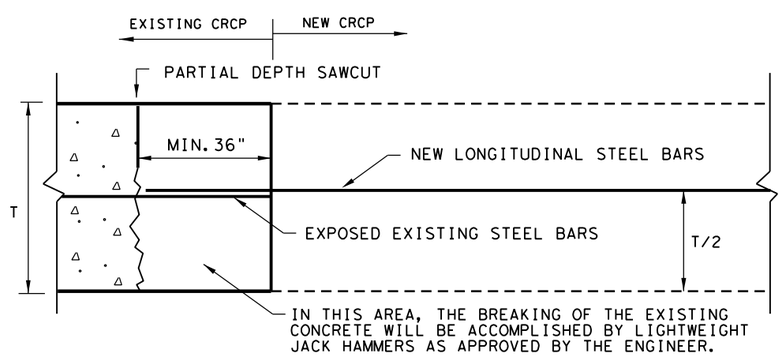

OPTION B: BREAKBACK AND LAP

TRANSVERSE TIE JOINT DETAIL
EXISTING CRCP TO NEW CRCP

SHEET 2 OF 2

Texas Department of Transportation — Design Division Standard

CONTINUOUSLY REINFORCED CONCRETE PAVEMENT

ONE LAYER STEEL BAR PLACEMENT
T - 7 to 13 INCHES

CRCP(1)-20

FILE: crcp120.dgn	DN: TxDOT	CK: KM	DW: AN	CK: VP
© TxDOT: APRIL 2020	CONT	SECT	JOB	HIGHWAY
REVISIONS 03/16/2020 REMOVED TABLE 1A	DIST		COUNTY	SHEET NO. 17

DATE:
FILE:

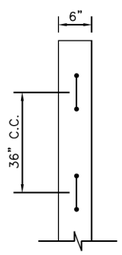

TYPICAL CONCRETE CURB
REINFORCEMENT PLAN VIEW

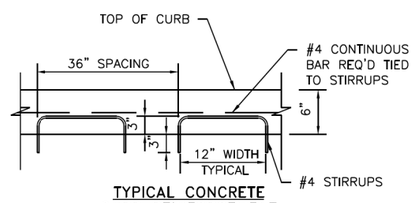

TYPICAL CONCRETE
CURB REINFORCEMENT
NTS

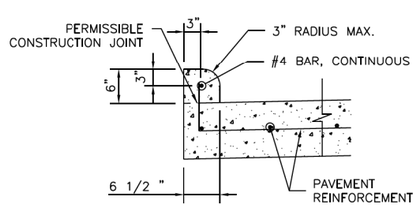

TYPICAL CONCRETE CURB
REINFORCING DETAILS
SCALE: 1" = 1'-0"

STATE OF TEXAS
MAHMOUD SALEHI
89552
LICENSED
PROFESSIONAL ENGINEER

2/11/2022

No.	Date	Revisions	App.

THE STATE OF TEXAS
FORT BEND COUNTY

CobbFendley
TBPE Firm Registration No. 274
TBPLS Firm Registration No. 100467
22316 Grand Corner Drive, Suite 100
Katy, Texas 77494
713.462.3242 | fax 713.462.3262
www.cobbfendley.com

WEST BELLFORT ROAD
WESTBOUND LANES ONTO SH99

CONCRETE CURB AND
GUTTER DETAILS

SUBMITTED:	DESIGNED BY:
SCALE: N/A	CC'D BY:
DATE: 2/11/2022	SHEET NO 18 OF 43 SHEETS
SURVEY: COBBFENDLEY	
CF JOB NO: 2111-002	

4:03:44 PM
2/11/2022
B:\Projects\2021\11002*Ft*Bend*County*Engineering\03*West*Belfort*Street*WB*lanes*onto*SH*99\400*CAD\411*Trans\11-Details\211100203*CURBDET01.dgn

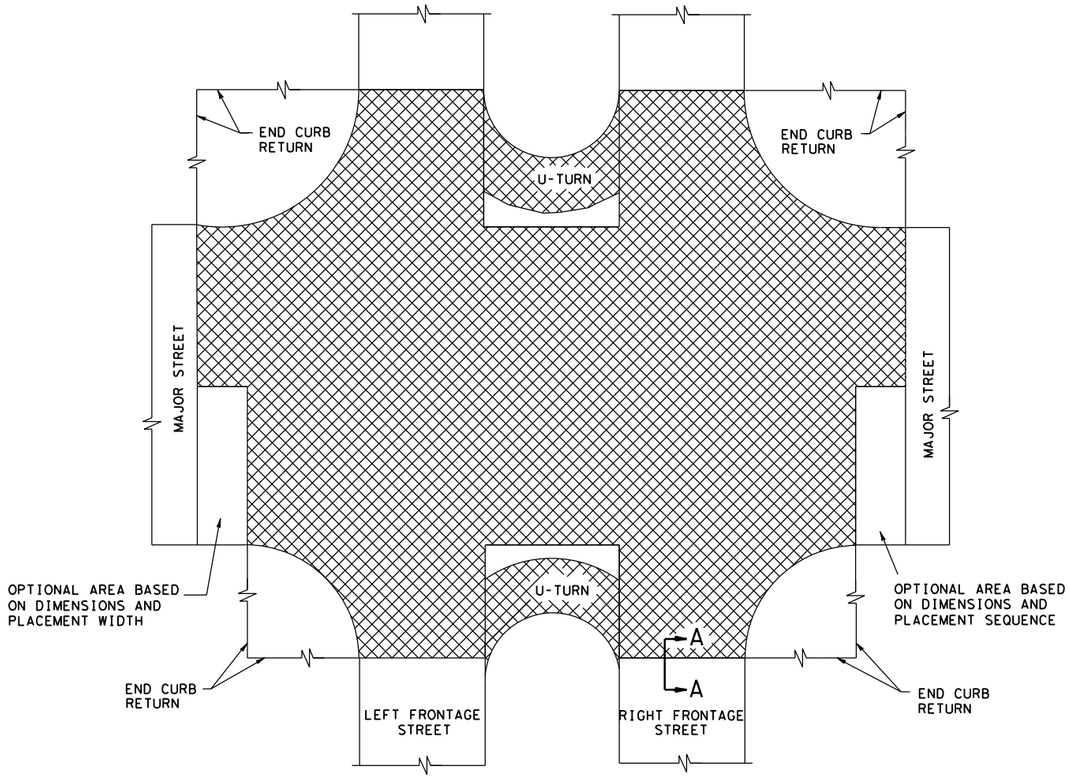

FIGURE 2

INTERSECTION OF MAJOR STREET WITH FRONTAGE STREET

FAST TRACK PAVING AREA

TYPICAL PAVING PLANS

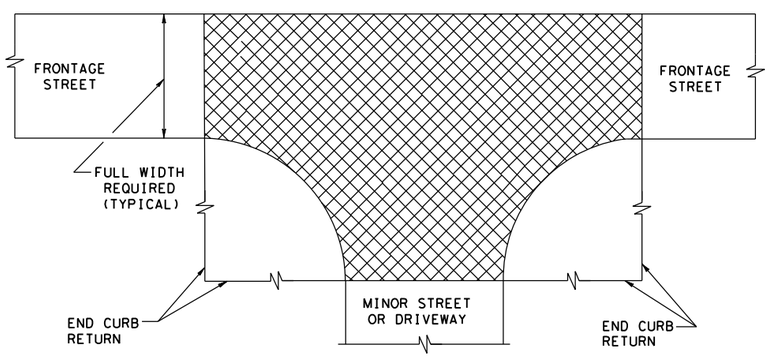

FIGURE 3

INTERSECTION OF MINOR STREET OR DRIVEWAY WITH FRONTAGE STREET

TABLE 1

EQUIVALENT PAVEMENT THICKNESS	
T * (IN.)	T_{FS} ** (IN.)
<=12"	T+3"
>12"	15"

*WITH BASE STRUCTURE OF:
1" ASPHALT STABILIZED BASE
6" PORTLAND CEMENT TREATED BASE
6" LIME TREATED SUBGRADE

**ON AS CUT SUBGRADE

***SEE JOINT SEALING DETAILS ON CRCP STANDARDS

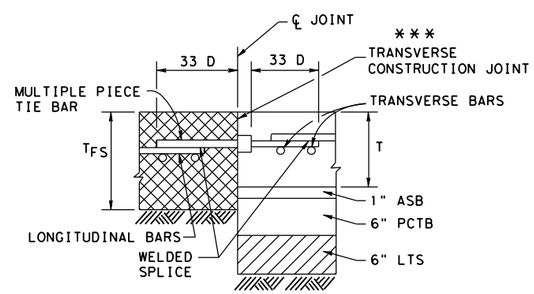

SINGLE MAT

TRANSVERSE CONSTRUCTION JOINTS

SECTION A - A
FIGURE 1

GENERAL NOTES

1. DEFINITION OF TERMS

   T_{FS} - FAST TRACK CONCRETE PAVING DEPTH AT INTERSECTIONS AND LEAVE OUTS.
   T - NOMINAL CONCRETE PAVING DEPTH AS SHOWN IN THE PLANS.
   DETERMINE FAST TRACK CONCRETE PAVING DEPTH USING TABLE 1 AND THE NOMINAL CONCRETE PAVING DEPTH "T" SHOWN IN THE PLANS.

2. AT INTERSECTIONS AND LEAVE-OUT LOCATIONS USE THE SAME LONGITUDINAL AND TRANSVERSE BAR SPACING FOR THE FAST TRACK PAVING AREA AS THAT USED FOR THE ADJACENT CONCRETE PAVING DEPTH "T"(EXCEPT BAR SIZE SHALL BE #7 ON SINGLE MAT). FOR SINGLE MAT FAST TRACK PAVING, PLACE THE LONGITUDINAL AND TRANSVERSE BARS FOR THE FAST TRACK PAVING AREA AT THE HORIZONTAL PLANE ELEVATION THAT IS TWO TIE-BAR DIAMETERS LOWER THAN THAT USED FOR THE ADJACENT CONCRETE PAVEMENT DEPTH "T", AS SHOWN IN FIGURE 1. USE SINGLE MAT STEEL IN FAST TRACK PAVING AREAS ADJACENT TO PAVEMENT SLABS WITH SINGLE MAT REINFORCING. USE DOUBLE MAT STEEL IN FAST TRACK PAVING AREAS ADJACENT TO PAVEMENT SLABS WITH DOUBLE MAT REINFORCING.

3. THE REQUIRED FAST TRACK PAVING AREAS WILL BE SHOWN ON THE PLANS. THE CONTRACTOR HAS THE OPTION TO UTILIZE FAST TRACK CONCRETE PAVING AT U-TURNS, AT INTERSECTIONS, AT MINOR STREETS, AND AT DRIVEWAYS WITH FRONTAGE ROAD LEAVE-OUT AREAS THAT ARE NOT SHOWN ON THE PLANS, WITH PRIOR WRITTEN APPROVAL FROM THE ENGINEER. TYPICAL PAVING PLANS FOR THE INTERSECTION OF A MAJOR STREET WITH THE FRONTAGE ROAD ARE SHOWN AS FIGURE 2, AND FOR THE INTERSECTION OF A MINOR STREET OR DRIVEWAY WITH THE FRONTAGE ROAD AS FIGURE 3. FAST TRACK PAVE THE FRONTAGE ROAD FOR THE FULL FRONTAGE ROAD WIDTH AND PLACE IN STAGES AS REQUIRED.

4. USE ADDITIONAL #6 REINFORCING STEEL BARS (MINIMUM 42 INCHES LONG) AND SPACE THEM MIDWAY BETWEEN ALTERNATE LONGITUDINAL BARS ALONG THE THE TRANSVERSE CONSTRUCTION JOINT FORMED AT THE FAST TRACK PAVING INTERFACE (T_{FS}) WITH THE ADJACENT PAVEMENT SLAB (T).

5. SPLICE LENGTH IS A MINIMUM OF 33 TIMES THE NOMINAL STEEL DIAMETER.

6. PLACE THE CONCRETE PLACEMENT AT A UNIFORM DEPTH THROUGHOUT THE FAST TRACK CONCRETE PAVING AREA.

7. FOR CONTINUOUS SECTIONS OF ROADWAY WHERE FAST TRACK PAVING IS THE PRIMARY PAVEMENT TYPE, USE THE BAR SIZE AND SPACING FROM THE CRCP STANDARDS THAT CORRESPONDS TO THE FAST TRACK SLAB THICKNESS.

8. USE LONGITUDINAL TIE-BARS OF THE SAME SIZE DIAMETER AND SPACING AS THE LONGITUDINAL BAR. A SINGLE PIECE TIE-BAR MAY BE USED IF THE 33 TIMES DIAMETER TIE-BAR PROJECTION DOES NOT INTERFERE WITH THE SAFE HANDLING OF TRAFFIC.

9. BASE THE DEPTH OF SAW CUTS FOR SAWED JOINTS ON THE FAST TRACK CONCRETE PAVEMENT THICKNESS.

10. THIS STANDARD IS NOT INTENDED TO REPLACE OTHER STANDARDS EXCEPT WHERE SPECIFICALLY STATED HEREIN. FOR PAVING DETAILS NOT SHOWN ON THIS DRAWING, REFER TO THE STANDARD SHEETS FOR CONTINUOUSLY REINFORCED CONCRETE PAVEMENT SHOWN ELSEWHERE IN THE PLANS.

LEGEND

ASB - ASPHALT STABILIZED BASE
CRCP - CONTINUOUSLY REINFORCED CONCRETE PAVEMENT
D - DIAMETER
LTS - LIME TREATED SUBGRADE
PCTB - PORTLAND CEMENT TREATED BASE

Texas Department of Transportation
Houston District

FAST TRACK CONTINUOUSLY REINFORCED CONCRETE PAVEMENT
DETAILS
CRCP-FT

FILE: STDB-4.dgn	DN:	CK:	DW:	CK:
© TxDOT DEC. 2009	DIST	FED REG	PROJECT NO.	SHEET
REVISIONS 5/05 2004 SPECS 2/15 2014 SPECS	HOU	6		19
	COUNTY	CONTROL	SECT / JOB	HIGHWAY

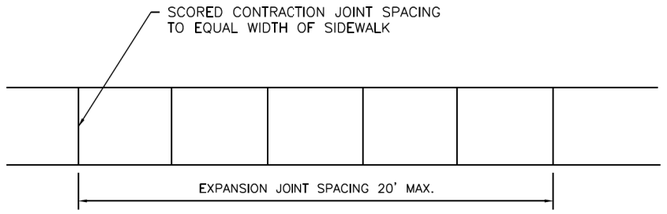

SIDEWALK JOINT DETAILS

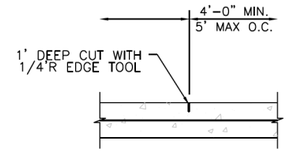

CONTRACTION JOINT SEAL

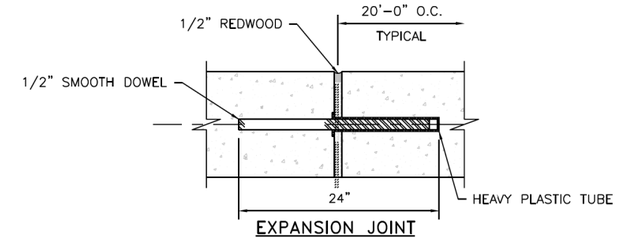

EXPANSION JOINT

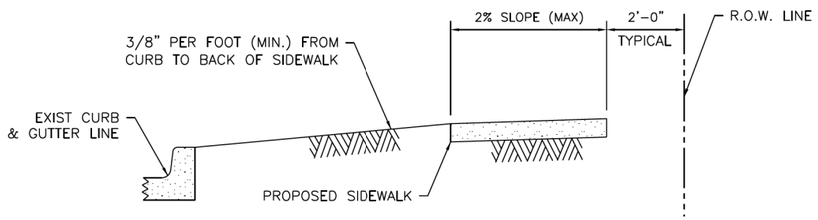

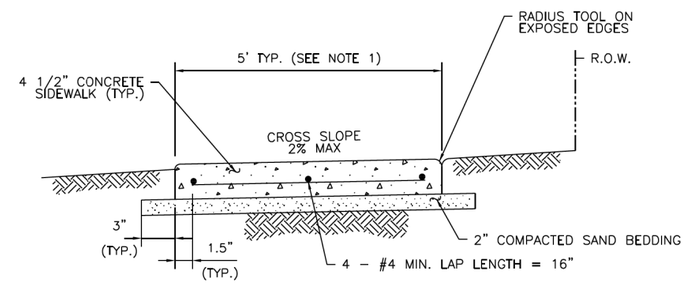

SIDEWALK CROSS SECTION

NOTES:

1. TYPICAL SIDEWALK WIDTH IS 5'. SIDEWALKS OF 4' WIDTH ARE ALLOWED IN FRONT OF SINGLE FAMILY HOMES IF ALL DRIVEWAYS PROVIDE A 5' AREA FOR PASSING. SIDEWALKS OF 4' WITH 5' X 5' PASSING ZONES MUST BE SPECIFICALLY APPROVED BY FORT BEND COUNTY
2. THE MAXIMUM WIDTH BETWEEN EXPANSION JOINTS SHALL NOT EXCEED 20'-0"
3. EXPANSION JOINT IS TO BE 1/2" THICK CLEAR HEART REDWOOD DOWELS
4. SCORED CONTRACTION JOINTS SHALL BE EVERY 5' OR EQUAL TO SIDEWALK WIDTH
5. ALL EARTHEN AREAS ARE TO BE SODDED UNLESS SHOWN OTHERWISE ON DRAWINGS.
6. SIDEWALKS ARE TO BE REINFORCED CONCRETE (3500 PSI) WITH #4 BARS, 18 INCHES C-C.
7. USE RADIUS TOOL ON ALL EXPOSED EDGES.
8. MEMBRANE CURING COMPOUND IS REQUIRED AS DESCRIBED IN ITEM 526 IN THE TXDOT STANDARD SPECIFICATIONS FOR CONSTRUCTION
9. SIDEWALK EXPANSION JOINTS SHALL CONFORM TO STREET EXPANSION JOINT STANDARDS

NOTE:

BANK SAND IS DEFINED AS A WELL-GRADED SAND, FREE OF SILT, CLAY, LOAM, FRIABLE OR SOLUBLE MATERIALS AND ORGANIC MATTER, MEETING THE UNIFIED SOILS CLASSIFICATION SYSTEM GROUP SW CRITERIA W/ A PLASTICITY INDEX OF LESS THAN 10, AND NO MORE THAN 12% OF MATERIAL CAN PASS THE NO. 200 SIEVE.

STATE OF TEXAS
MAHMOUD SALEHI
89552
LICENSED
PROFESSIONAL ENGINEER
2/11/2022

No.	Date	Revisions	App.

THE STATE OF TEXAS
FORT BEND COUNTY

CobbFendley
TBPE Firm Registration No. 274
TBPLS Firm Registration No. 100467
22316 Grand Corner Drive, Suite 100
Katy, Texas 77494
713.462.3242 | fax 713.462.3262
www.cobbfendley.com

WEST BELLFORT ROAD
WESTBOUND LANES ONTO SH99

SIDEWALK DETAILS

SUBMITTED:	DESIGNED BY:
SCALE: N/A	CC'D BY:
DATE: 2/11/2022	SHEET NO 20 OF 43 SHEETS
SURVEY: COBBFENDLEY	
CF JOB NO: 2111-002	

4:03:48 PM
2/11/2022
B:\Projects\2021\11002*Ft*Bend*County*Engineering\03*West*Bellfort*Street*WB*lanes*onto*SH99\400*CAD\411*Trans\11-Details\211100203*SIDEDET01.dgn

TYPE 1

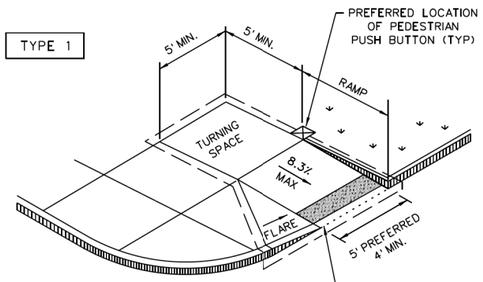

PERPENDICULAR CURB RAMP

TYPE 2

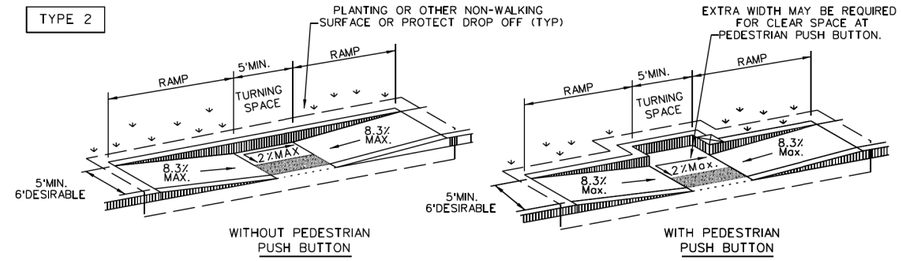

PARALLEL CURB RAMP

TYPE 3

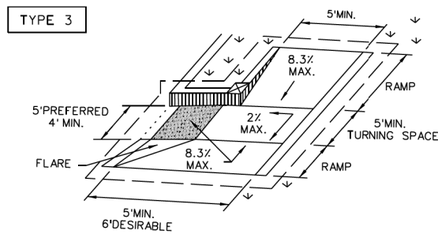

TYPE 6

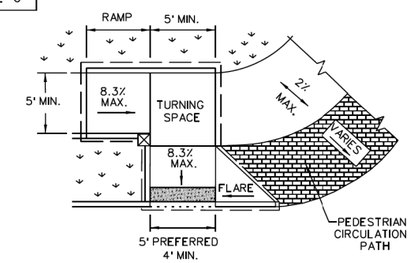

COMBINATION CURB RAMPS

TYPE 20

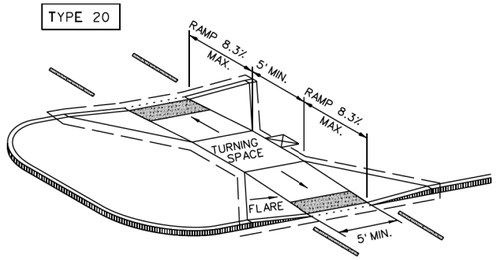

CURB RAMPS AT MEDIAN ISLANDS

TYPE 7

(SIDEWALK SET BACK FROM CURB)

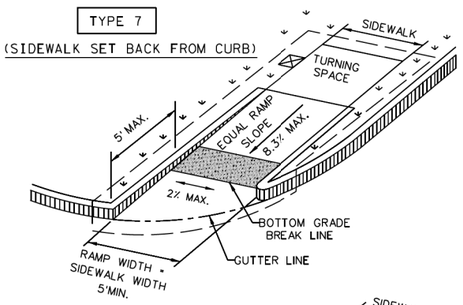

CROSS SLOPE NOT TO EXCEED 2% ON ANY PORTION OF RAMP, TURNING SPACE OR TRANSITION TO STREET.

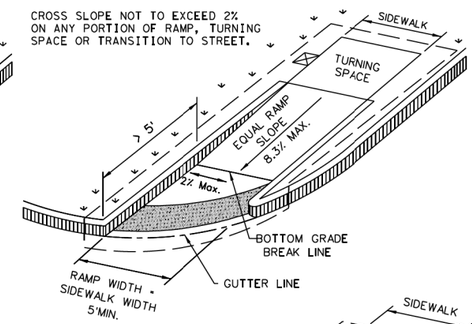

TYPE 10

(SIDEWALK ADJACENT TO CURB)

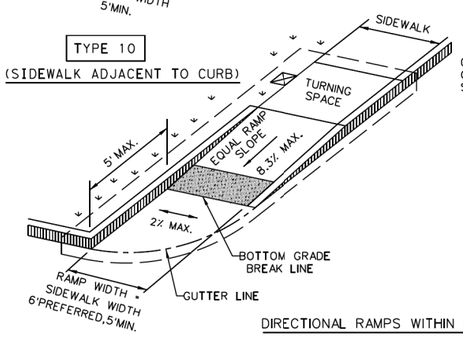

CROSS SLOPE NOT TO EXCEED 2% ON ANY PORTION OF RAMP, TURNING SPACE OR TRANSITION TO STREET.

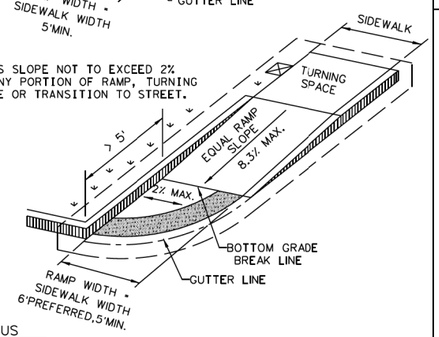

DIRECTIONAL RAMPS WITHIN RADIUS

TYPE 5

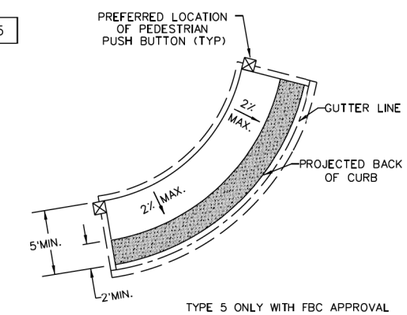

TYPE 5 ONLY WITH FBC APPROVAL

TYPE 21

INSTALL DETECTABLE WARNING SURFACE AT EACH END OF THE CUT-THROUGH RAMP WITH A MINIMUM 2' USUAL SIDEWALK SURFACE BETWEEN. IF MEDIAN IS LESS THAN 6' WIDE, ELIMINATE DETECTABLE WARNING SURFACES.

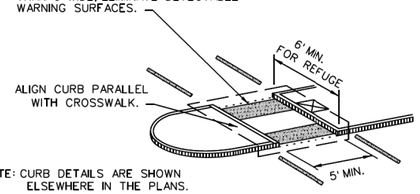

NOTE: CURB DETAILS ARE SHOWN ELSEWHERE IN THE PLANS.

TYPE 22

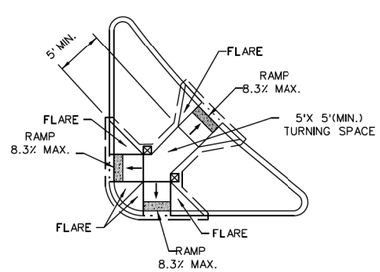

COMBINATION ISLAND RAMPS

BOTTOM GRADE BREAK OF CURB RAMP WILL NORMALLY BE AT GUTTER LINE. SURFACE SLOPES AT GRADE BREAKS SHALL BE FLUSH.

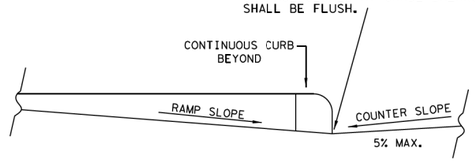

TYPICAL SECTION OF PERPENDICULAR CURB RAMP AT CONNECTION TO ROADWAY

NOTES / LEGEND:

SEE GENERAL NOTES ON SHEET 2 OF 4 FOR MORE INFORMATION.

DENOTES PLANTING OR NON-WALKING SURFACE NOT PART OF PEDESTRIAN CIRCULATION PATH.

DETECTABLE WARNING SURFACE

DENOTES PREFERRED LOCATION OF PEDESTRIAN PUSH BUTTON IF APPLICABLE.

GUTTER LINE

GRADE BREAK

RAMP LIMITS OF PAYMENT

STATE OF TEXAS
MAHMOUD SALEHI
89552
LICENSED PROFESSIONAL ENGINEER
2/11/2022

No.	Date	Revisions	App.

THE STATE OF TEXAS
FORT BEND COUNTY

CobbFendley
TBPE Firm Registration No. 274
TBPLS Firm Registration No. 100467
22316 Grand Corner Drive, Suite 100
Katy, Texas 77494
713.462.3242 | fax 713.462.3262
www.cobbfendley.com

WEST BELLFORT ROAD
WESTBOUND LANES ONTO SH99

PED- 18 RAMP DETAILS
SHEET 1 OF 3

SUBMITTED:	DESIGNED BY:
SCALE: N/A	CC'D BY:
DATE: 2/11/2022	SHEET NO 21 OF 43 SHEETS
SURVEY: COBBFENDLEY	
CF JOB NO: 2111-002	

4:03:51 PM
2/11/2022
B:\Projects\2021\11002*Ft*Bend*County*Engineering\03*West*Belfort*Street*WB*Lonesome*SH*99\400*CAD\411*Trans\11-Details\211100203*RAMPDET01.dgn

GENERAL NOTES

CURB RAMPS

1. Install a curb ramp or blended transition at each pedestrian street crossing.
2. All slopes shown are maximum allowable. Cross slopes of 1.5% and lesser running should be used. Adjust curb ramp length or grade of approach sidewalks as directed.
3. Maximum allowable cross slope on sidewalk and curb ramp surfaces is 2%.
4. The minimum sidewalk width is 5'. Where the sidewalk is adjacent to the back of curb, a 6' sidewalk width is desirable. Where a 5' sidewalk cannot be provided due to site constraints, sidewalk width may be reduced to 4' for short distances. 5'x 5' passing areas at intervals not to exceed 200' are required.
5. Turning Spaces shall be 5'x 5' minimum. Cross slope shall be maximum 2%.
6. Clear space at the bottom of curb ramps shall be a minimum of 4'x 4' wholly contained within the crosswalk and wholly outside the parallel vehicular travel path.
7. Provide flared sides where the pedestrian circulation path crosses the curb ramp. Flared sides shall be sloped at 10% maximum, measured parallel to the curb. Returned curbs may be used only where pedestrians would not normally walk across the ramp, either because the adjacent surface is planted, substantially obstructed, or otherwise protected.
8. Additional information on curb ramp location, design, light reflective value and texture may be found in the latest draft of the Proposed Guidelines for Pedestrian Facilities in the Public Right of Way (PROWAG) as published by the U.S. Architectural and Transportation Barriers Compliance Board (Access Board).
9. To serve as a pedestrian refuge area, the median should be a minimum of 6' wide, measured from back of curbs. Medians should be designed to provide accessible passage over or through them.
10. Small channelization islands, which do not provide a minimum 5'x 5' landing at the top of curb ramps, shall be cut through level with the surface of the street.
11. Crosswalk dimensions, crosswalk markings and stop bar locations shall be as shown elsewhere in the plans. At intersections where crosswalk markings are not required, curb ramps shall align with theoretical crosswalks unless otherwise directed.
12. Provide curb ramps to connect the pedestrian access route at each pedestrian street crossing. Handrails are not required on curb ramps.
13. Curb ramps and landings shall be constructed and paid for in accordance with Item 531 "Sidewalks".
14. Place concrete at a minimum depth of 5" for ramps, flares and landings, unless otherwise directed.
15. Furnish and install No. 3 reinforcing steel bars at 18" o.c. both ways, unless otherwise directed.
16. Provide a smooth transition where the curb ramps connect to the street.
17. Curbs shown on sheet 1 within the limits of payment are considered part of the curb ramp for payment, whether it is concrete curb, gutter, or combined curb and gutter.
18. Existing features that comply with applicalble standards may remain in place unless otherwise shown on the plans.

DETECTABLE WARNING MATERIAL

19. Curb ramps must contain a detectable warning surface that consists of raised truncated domes complying with PROWAG. The surface must contrast visually with adjoining surfaces, including side flares. Furnish and install an approved cast-in-place dark brown or dark red detectable warning surface material adjacent to uncolored concrete, unless specified elsewhere in the plans.
20. Detectable Warning Materials must meet TxDOT Departmental Materials Specification DMS 4350 and be listed on the Material Producer List. Install products in accordance with manufacturer's specifications.
21. Detectable warning surfaces must be firm, stable and slip resistant.
22. Detectable warning surfaces shall be a minimum of 24 inches in depth in the direction of pedestrian travel, and extend the full width of the curb ramp or landing where the pedestrian access route enters the street.
23. Detectable warning surfaces shall be located so that the edge nearest the curb line is at the back of curb and neither end of that edge is greater than 5 feet from the back of curb. Detectable warning surfaces may be curved along the corner radius.
24. Shaded areas on Sheet 1 of 4 indicate the approximate location for the detectable warning surface for each curb ramp type.

DETECTABLE WARNING PAVERS (IF USED)

25. Furnish detectable warning paver units meeting all requirements of ASTM C-936, C-33. Lay in a two by two unit basket weave pattern or as directed.
26. Lay full-size units first followed by closure units consisting of at least 25 percent (25%) of a full unit. Cut detectable warning paver units using a power saw.

SIDEWALKS

27. Provide clear ground space at operable parts, including pedestrian push buttons. Operable parts shall be placed within unobstructed reach range specified in PROWAG section R406.
28. Place traffic signal or illumination poles, ground boxes, controller boxes, signs, drainage facilities and other items so as not to obstruct the pedestrian access route or clear ground space.
29. Street grades and cross slopes shall be as shown elsewhere in the plans.
30. Changes in level greater than 1/4 inch are not permitted.
31. The least possible grade should be used to maximize accessibility. The running slope of sidewalks and crosswalks within the public right of way may follow the grade of the parallel roadway. Where a continuous grade greater than five percent (5%) must be provided, handrails may be desirable to improve accessibility. Handrails may also be needed to protect pedestrians from potentially hazardous conditions. If provided, handrails shall comply with PROWAG R409.
32. Handrail extensions shall not protrude into the usable landing area or into intersecting pedestrian routes.
33. Driveways and turnouts shall be constructed and paid for in accordance with Item "Intersections, Driveways and Turnouts". Sidewalks shall be constructed and paid for in accordance with Item, "Sidewalks".
34. Sidewalk details are shown elsewhere in the plans.

DETECTABLE WARNING SURFACE DETAILS

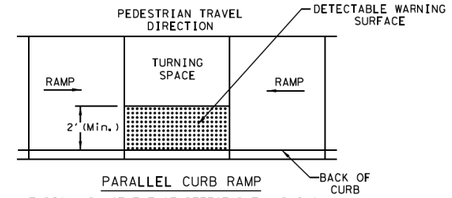

PARALLEL CURB RAMP

TYPICAL PLACEMENT OF DETECTABLE WARNING SURFACE ON LANDING AT STREET EDGE.

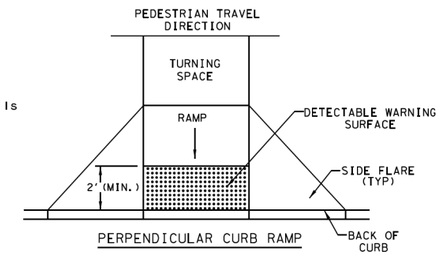

PERPENDICULAR CURB RAMP

TYPICAL PLACEMENT OF DETECTABLE WARNING SURFACE ON SLOPING RAMP RUN.

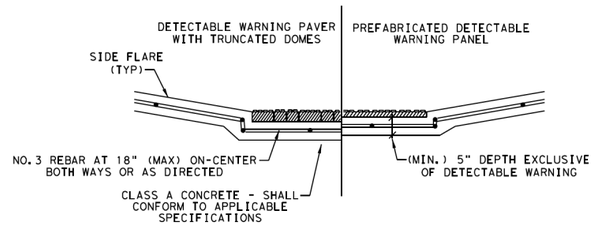

SECTION VIEW DETAIL

CURB RAMP AT DETECTIBLE WARNINGS

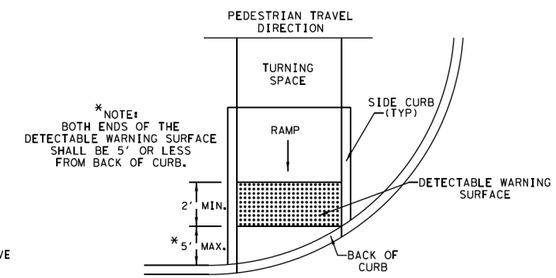

DIRECTIONAL CURB RAMP

TYPICAL PLACEMENT OF DETECTABLE WARNING SURFACE ON SLOPING RAMP RUN.

STATE OF TEXAS
MAHMOUD SALEHI
89552
LICENSED PROFESSIONAL ENGINEER

2/11/2022

No.	Date	Revisions	App.

THE STATE OF TEXAS
FORT BEND COUNTY

CobbFendley
TBPE Firm Registration No. 274
TBPLS Firm Registration No. 100467
22316 Grand Corner Drive, Suite 100
Katy, Texas 77494
713.462.3242 | fax 713.462.3262
www.cobbfendley.com

WEST BELLFORT ROAD
WESTBOUND LANES ONTO SH99

PED- 18 RAMP DETAILS
SHEET 2 OF 3

SUBMITTED:	DESIGNED BY:
SCALE: N/A	CC'D BY:
DATE: 2/11/2022	SHEET NO 22 OF 43 SHEETS
SURVEY: COBBFENDLEY	
CF JOB NO: 2111-002	

4:03:58 PM
2/11/2022
B:\Projects\2021\11002*Ft*Bend*County*Engineering\03*West*Belfort*Street*WB*lanes*onto*SH*99\400*CAD\41*Trans\11-Details\2111100203*RAMPDET02.dgn

SIDEWALK TREATMENT AT DRIVEWAYS

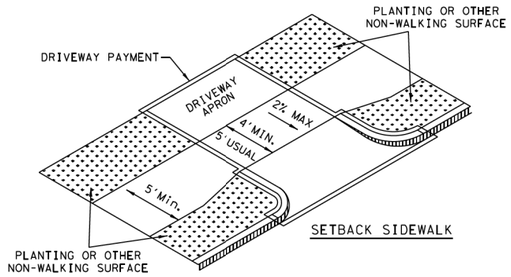

SETBACK SIDEWALK

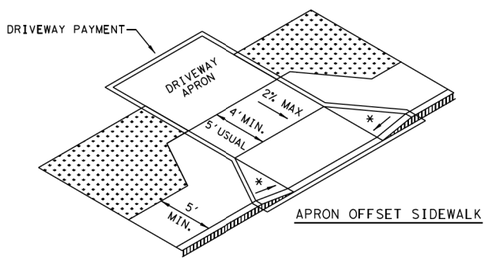

APRON OFFSET SIDEWALK

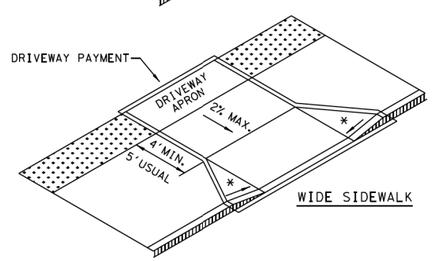

WIDE SIDEWALK

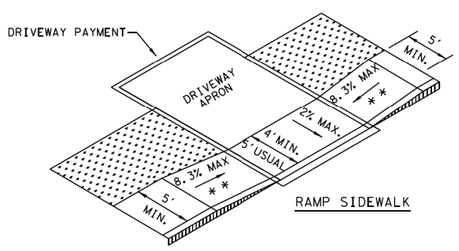

RAMP SIDEWALK

NOTES:

* WHERE DRIVEWAYS CROSS THE PEDESTRIAN ROUTE, SIDES SHALL BE FLARED AT 10% MAX SLOPE.

* * IF CURB HEIGHT IS GREATER THAN 6 INCHES, USE GRADE LESS THAN OR EQUAL TO 5%. HANDRAIL AND DETECTABLE WARNING ARE NOT REQUIRED.

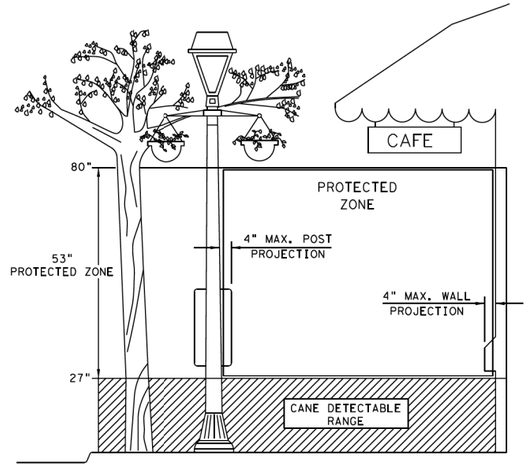

PROTECTED ZONE

NOTE: IN PEDESTRIAN CIRCULATION AREA, MAXIMUM 4" PROJECTION FOR POST OR WALL MOUNTED OBJECTS BETWEEN 27" AND 80" ABOVE THE SURFACE.

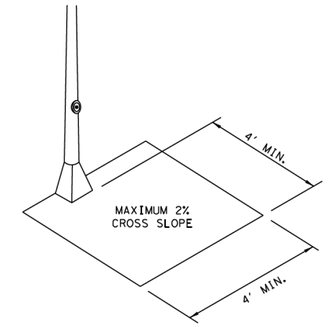

CLEAR SPACE ADJACENT TO PEDESTRIAN PUSH BUTTON

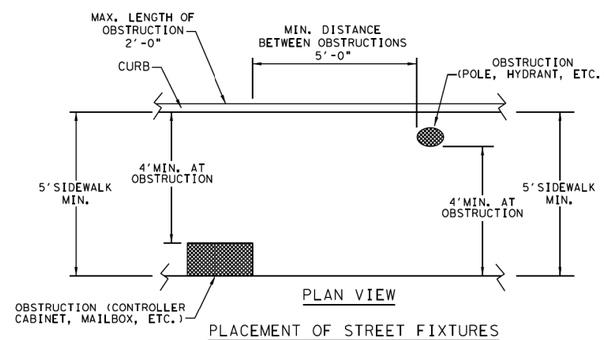

PLAN VIEW

PLACEMENT OF STREET FIXTURES

NOTE: ITEMS NOT INTENDED FOR PUBLIC USE. MINIMUM 4' X 4' CLEAR GROUND SPACE REQUIRED AT PUBLIC USE FIXTURES.

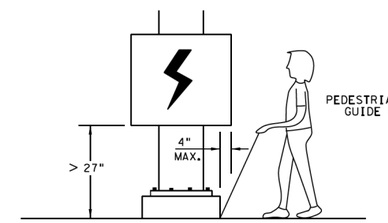

WHEN AN OBSTRUCTION OF A HEIGHT GREATER THAN 27" FROM THE SURFACE WOULD CREATE A PROTRUSION OF MORE THAN 4" INTO THE PEDESTRIAN CIRCULATION AREA, CONSTRUCT ADDITIONAL CURB OR FOUNDATION AT THE BOTTOM TO PROVIDE A MAXIMUM 4" OVERHANG.

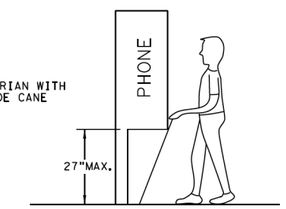

PROTRUDING OBJECTS OF A HEIGHT ≤27" ARE DETECTABLE BY CANE AND DO NOT REQUIRE ADDITIONAL TREATMENT.

DETECTION BARRIER FOR VERTICAL CLEARANCE < 80"

STATE OF TEXAS
MAHMOUD SALEHI
89552
LICENSED PROFESSIONAL ENGINEER
2/11/2022

No.	Date	Revisions	App.

THE STATE OF TEXAS
FORT BEND COUNTY

CobbFendley
TBPE Firm Registration No. 274
TBPLS Firm Registration No. 100467
22316 Grand Corner Drive, Suite 100
Katy, Texas 77494
713.462.3242 | fax 713.462.3262
www.cobbfendley.com

WEST BELLFORT ROAD
WESTBOUND LANES ONTO SH99

PED- 18 RAMP DETAILS
SHEET 3 OF 3

SUBMITTED:	DESIGNED BY:
SCALE: N/A	CC'D BY:
DATE: 2/11/2022	SHEET NO 23 OF 43 SHEETS
SURVEY: COBBFENDLEY	
CF JOB NO: 2111-002	

4:04:02 PM
2/11/2022
B:\Projects\2021\11002*Ft*Bend*County*Engineering\03*West*Bellfort*Street*WB*Jones*onto*SH*99\400*CAD\411*Trans\11-Details\2111100203*RAMPDET03.dgn

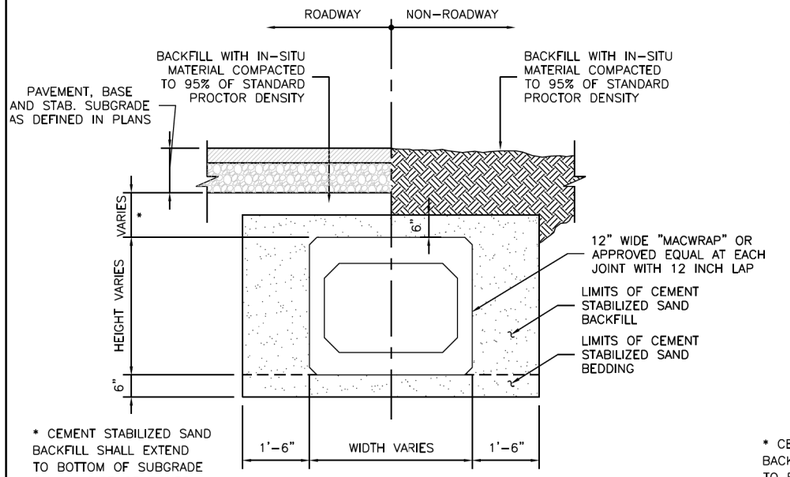

* CEMENT STABILIZED SAND BACKFILL SHALL EXTEND TO BOTTOM OF SUBGRADE ON ALL PIPE OR BOXES UNDERNEATH PAVEMENT OR WITHIN 2' BACK OF CURB.

PRECAST REINFORCED CONCRETE BOX

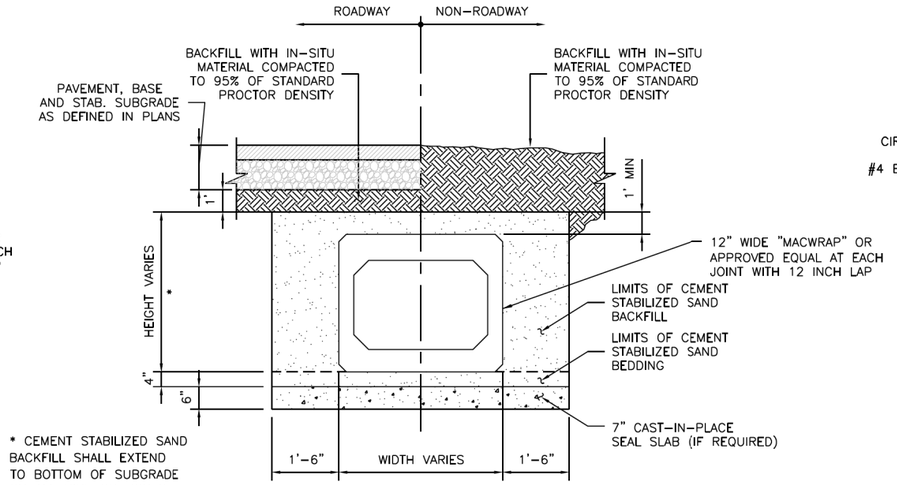

* CEMENT STABILIZED SAND BACKFILL SHALL EXTEND TO BOTTOM OF SUBGRADE ON ALL PIPE OR BOXES UNDERNEATH PAVEMENT OR WITHIN 2' BACK OF CURB.

PRECAST REINFORCED CONCRETE BOX WITH SEAL SLAB

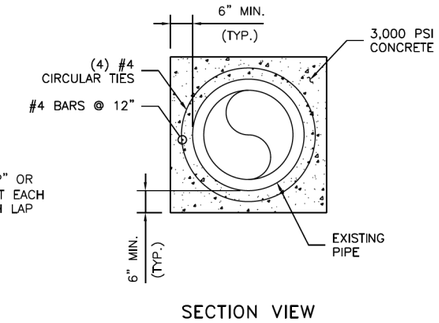

SECTION VIEW

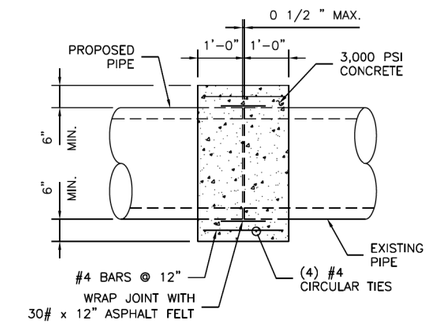

ELEVATION VIEW

TYPICAL CONCRETE COLLAR FOR 36" & SMALLER RCP

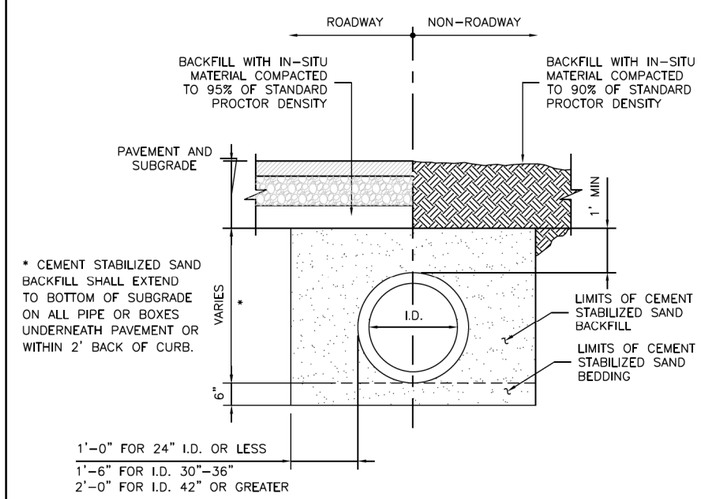

* CEMENT STABILIZED SAND BACKFILL SHALL EXTEND TO BOTTOM OF SUBGRADE ON ALL PIPE OR BOXES UNDERNEATH PAVEMENT OR WITHIN 2' BACK OF CURB.

REINFORCED CONCRETE PIPE

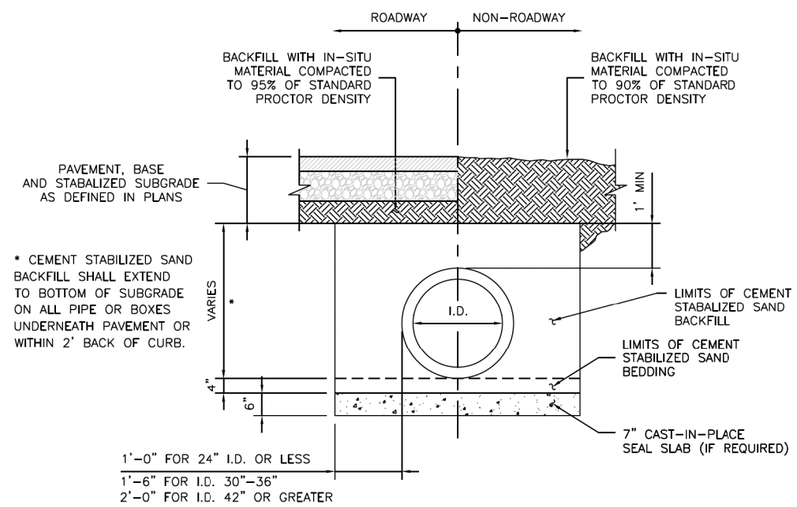

* CEMENT STABILIZED SAND BACKFILL SHALL EXTEND TO BOTTOM OF SUBGRADE ON ALL PIPE OR BOXES UNDERNEATH PAVEMENT OR WITHIN 2' BACK OF CURB.

REINFORCED CONCRETE PIPE WITH SEAL SLAB

GENERAL NOTES:

1. FOR RCP LARGER THAN 36" DIAMETER, CONCRETE COLLARS MUST BE DESIGNED BY THE ENGINEER OF RECORD.
2. ALL TRENCHES IN ROW SHALL BE BACKFILLED WITH 1.5 SACK CEMENT STABILIZED SAND TO WITHIN 1' OF SUBGRADE. COMPACTED TO 95% STANDARD PROCTOR DENSITY

STATE OF TEXAS
MAHMOUD SALEHI
89552
LICENSED PROFESSIONAL ENGINEER

2/11/2022

No.	Date	Revisions	App.

THE STATE OF TEXAS
FORT BEND COUNTY

CobbFendley
TBPE Firm Registration No. 274
TBPLS Firm Registration No. 100467
22316 Grand Corner Drive, Suite 100
Katy, Texas 77494
713.462.3242 | fax 713.462.3262
www.cobbfendley.com

WEST BELLFORT ROAD
WESTBOUND LANES ONTO SH99

STORM SEWER
CONSTRUCTION DETAILS

SUBMITTED:	DESIGNED BY:
SCALE: N/A	CC'D BY:
DATE: 2/11/2022	SHEET NO 24 OF 43 SHEETS
SURVEY: COBBFENDLEY	
CF JOB NO: 2111-002	

4:04:06 PM
2/11/2022
B:\Projects\2021\11002*Ft*Bend*County*Engineering\03*West*Belfort*Street*WB*Lanes*onto*SH*99\400*CAD\411*Trans\11-Details\211100203*STWDET01.dgn

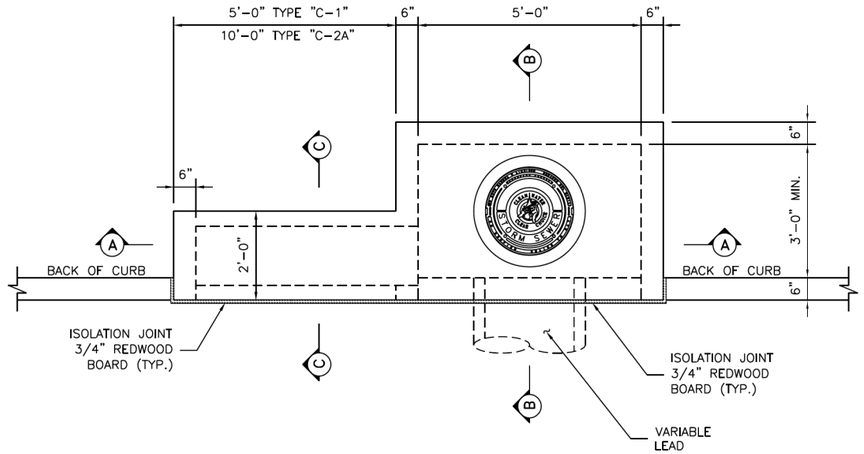

PLAN VIEW

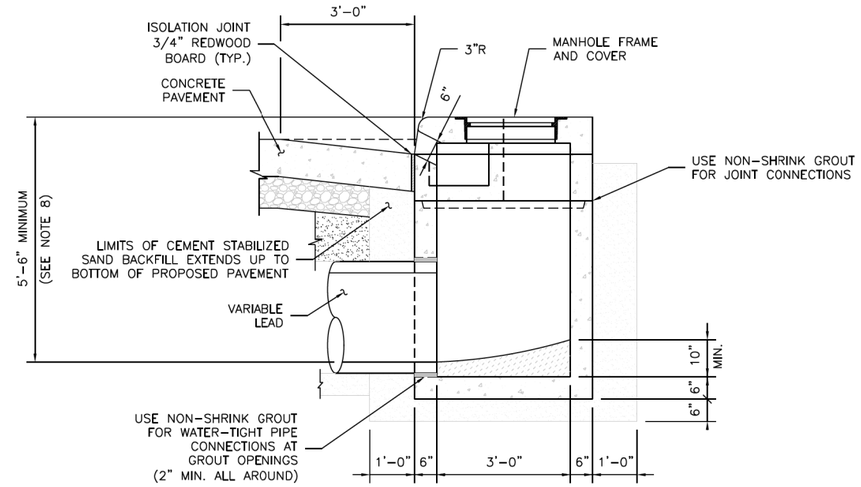

SECTION B-B

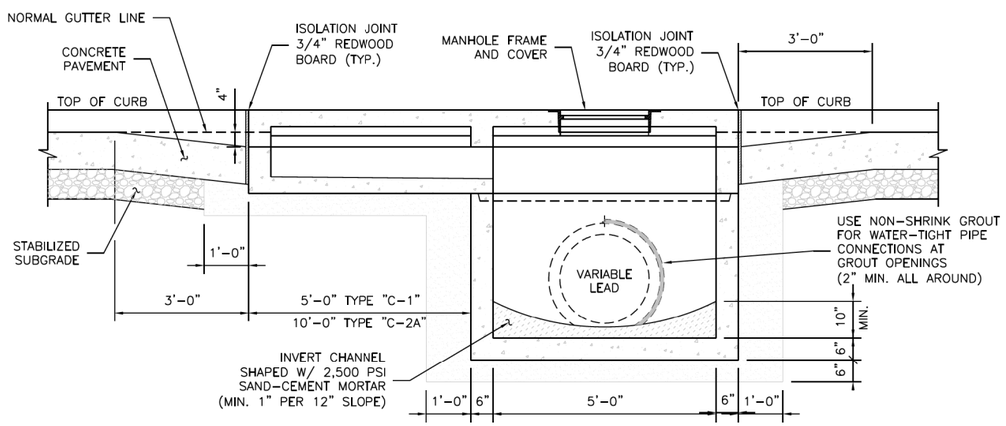

SECTION A-A INLET

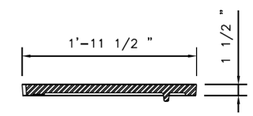

COVER SECTION A-A

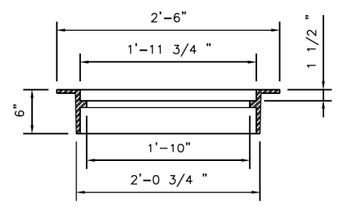

FRAME SECTION A-A

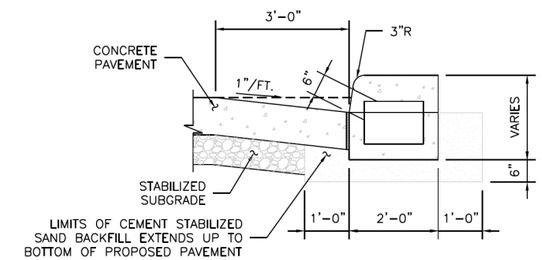

SECTION C-C

INLET NOTES:

TYPE "C": INLET ONLY - NO EXTENSION
TYPE "C-1": INLET WITH ONE EXTENSION (5'-0" LONG)
TYPE "C-2": INLET WITH ONE EXTENSION (5'-0" LONG) ON EACH SIDE
TYPE "C-2A": INLET WITH ONE DOUBLE EXTENSION (10'-0" LONG) ON ONE SIDE
* FOR TYPE "C-2A" INLETS, PROVIDE A CENTER 6"x6" COLUMN IN THE CURB LINE BETWEEN ALL EXTENSIONS.

GENERAL NOTES:

1. CONSTRUCTION AND MATERIALS SHALL MEET REQUIREMENTS OF ITEM 472 "INLETS".
2. CONCRETE FOR INLET: MINIMUM 4,000 PSI IN 28 DAYS
3. PRECAST STRUCTURE TO MEET ASTM C913.
4. FRAME AND COVER SHALL BE EAST JORDAN IRON WORKS MODEL V-1814 FRAME AND V-1418 COVER OR APPROVED EQUAL.
5. IF THE ENGINEER OF RECORD SPECIFIES A CAST-IN-PLACE INLET, HE/SHE SHALL INCORPORATE A DETAILED DRAWING INTO THE CONTRACT DOCUMENTS. HOWEVER, IF THE CONTRACTOR ELECTS TO CONSTRUCT A CAST-IN-PLACE INLET, THE CONTRACTOR WILL BE RESPONSIBLE FOR PROVIDING A DETAILED DRAWING, SIGNED AND SEALED BY A REGISTERED PROFESSIONAL ENGINEER LICENSED TO PRACTICE IN THE STATE OF TEXAS.
6. SHOP DRAWINGS WILL BE REQUIRED FOR THE PRECAST SECTION OF INLET.
7. KNOCK-OUTS ARE NOT PERMISSIBLE FOR THE PRECAST SECTION OF INLET.
8. 5'-6" MINIMUM OR AS SPECIFIED BY THE ENGINEER OF RECORD.

STATE OF TEXAS
MAHMOUD SALEHI
89552
LICENSED
PROFESSIONAL ENGINEER
2/11/2022

No.	Date	Revisions	App.

THE STATE OF TEXAS
FORT BEND COUNTY

CobbFendley
TBPE Firm Registration No. 274
TBPLS Firm Registration No. 100467
22316 Grand Corner Drive, Suite 100
Katy, Texas 77494
713.462.3242 | fax 713.462.3262
www.cobbfendley.com

WEST BELLFORT ROAD
WESTBOUND LANES ONTO SH99

TYPE C INLET DETAILS

SUBMITTED:	DESIGNED BY:
SCALE: N/A	CC'D BY:
DATE: 2/11/2022	SHEET NO 25 OF 43 SHEETS
SURVEY: COBBFENDLEY	
CF JOB NO: 2111-002	

4:04:12 PM
2/11/2022
B:\Projects\2021\11002*Ft*Bend*County*Engineering\03*West*Belfort*Street*WB*lanes*onto*SH99\400*CAD\411*Trans\11-Details\211100203*CINDET01.dgn

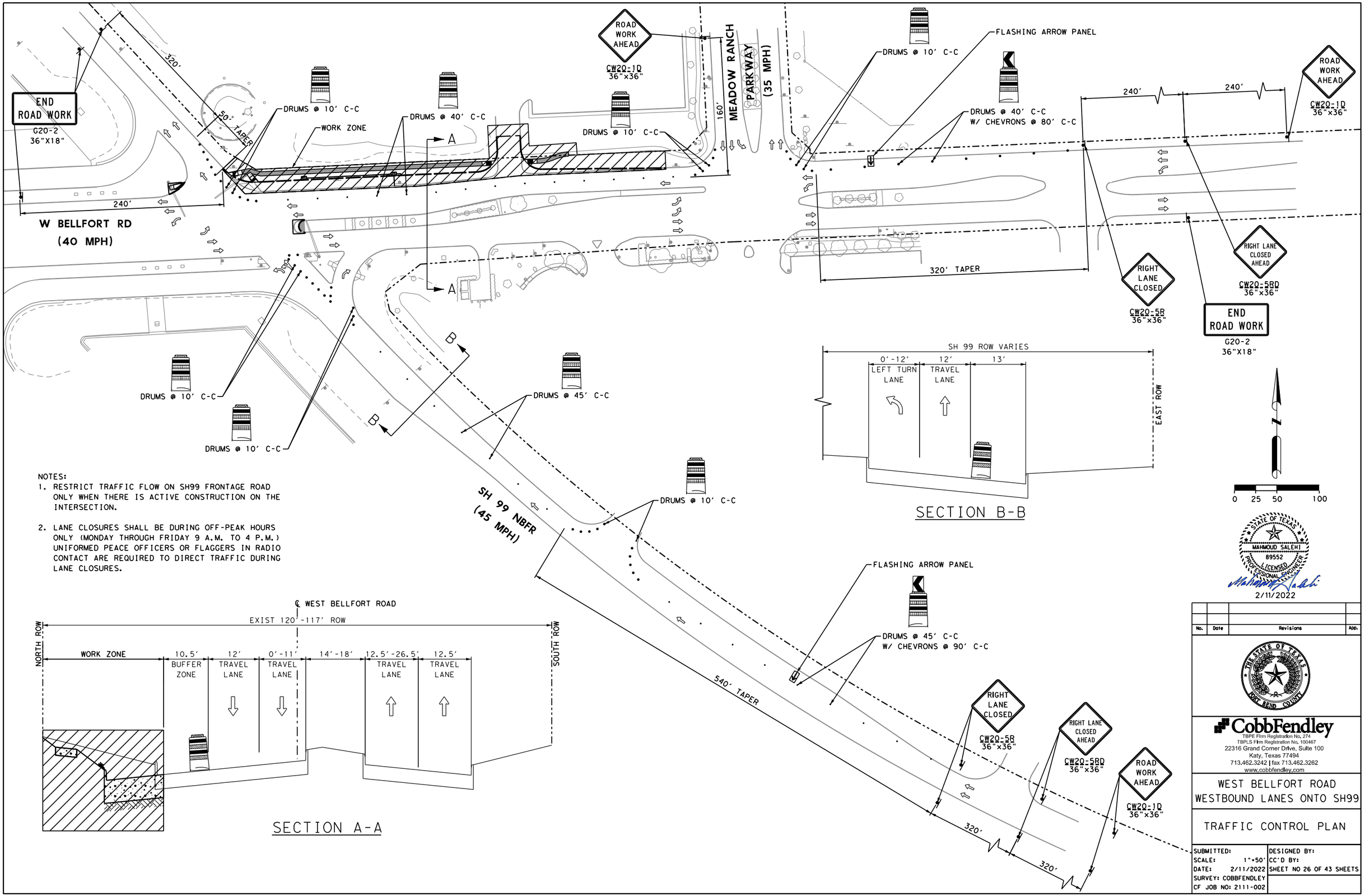

NOTES:

1. RESTRICT TRAFFIC FLOW ON SH99 FRONTAGE ROAD ONLY WHEN THERE IS ACTIVE CONSTRUCTION ON THE INTERSECTION.
2. LANE CLOSURES SHALL BE DURING OFF-PEAK HOURS ONLY (MONDAY THROUGH FRIDAY 9 A.M. TO 4 P.M.) UNIFORMED PEACE OFFICERS OR FLAGGERS IN RADIO CONTACT ARE REQUIRED TO DIRECT TRAFFIC DURING LANE CLOSURES.

STATE OF TEXAS
MAHMOUD SALEHI
89552
LICENSED
PROFESSIONAL ENGINEER
2/11/2022

No.	Date	Revisions	App.

THE STATE OF TEXAS
FORT BEND COUNTY

CobbFendley
TBPE Firm Registration No. 274
TBPLS Firm Registration No. 100467
22316 Grand Corner Drive, Suite 100
Katy, Texas 77494
713.462.3242 | fax 713.462.3262
www.cobbfendley.com

WEST BELLFORT ROAD
WESTBOUND LANES ONTO SH99

TRAFFIC CONTROL PLAN

SUBMITTED:	DESIGNED BY:
SCALE: 1"=50'	CC'D BY:
DATE: 2/11/2022	SHEET NO 26 OF 43 SHEETS
SURVEY: COBBFENDLEY	
CF JOB NO: 2111-002	

4:04:18 PM
2/11/2022
B:\Projects\2021\11002*Ft*Bend*County*Engineering\03*West*Belfort*Street*WB*Jones*to*SH*99\400*CAD\411*Trans\06-TCP\211100203*TCP01.dgn

DISCLAIMER:
The use of this standard is governed by the "Texas Engineering Practice Act". No warranty of any kind is made by TxDOT for any purpose whatsoever. TxDOT assumes no responsibility for the conversion of this standard to other formats or for incorrect results or damages resulting from its use.

BARRICADE AND CONSTRUCTION (BC) STANDARD SHEETS GENERAL NOTES:

1. The Barricade and Construction Standard Sheets (BC sheets) are intended to show typical examples for placement of temporary traffic control devices, construction pavement markings, and typical work zone signs. The information contained in these sheets meet or exceed the requirements shown in the "Texas Manual on Uniform Traffic Control Devices" (TMUTCD).

2. The development and design of the Traffic Control Plan (TCP)is the responsibility of the Engineer.

3. The Contractor may propose changes to the TCP that are signed and sealed by a licensed professional engineer for approval. The Engineer may develop, sign and seal Contractor proposed changes.

4. The Contractor is responsible for installing and maintaining the traffic control devices as shown in the plans. The Contractor may not move or change the approximate location of any device without the approval of the Engineer.

5. Geometric design of lane shifts and detours should, when possible, meet the applicable design criteria contained in manuals such as the American Association of State Highway and Transportation Officials (AASHTO), "A Policy on Geometric Design of Highways and Streets," the TxDOT "Roadway Design Manual" or engineering judgment.

6. When projects abut, the Engineer(s) may omit the END ROAD WORK, TRAFFIC FINES DOUBLE, and other advance warning signs if the signing would be redundant and the work areas appear continuous to the motorists. If the adjacent project is completed first, the Contractor shall erect the necessary warning signs as shown on these sheets, the TCP sheets or as directed by the Engineer. The BEGIN ROAD WORK NEXT X MILES sign shall be revised to show appropriate work zone distance.

7. The Engineer may require duplicate warning signs on the median side of divided highways where median width will permit and traffic volumes justify the signing.

8. All signs shall be constructed in accordance with the details found in the "Standard Highway Sign Designs for Texas," latest edition. Sign details not shown in this manual shall be shown in the plans or the Engineer shall provide a detail to the Contractor before the sign is manufactured.

9. The temporary traffic control devices shown in the illustrations of the BC sheets are examples. As necessary, the Engineer will determine the most appropriate traffic control devices to be used.

10. Where highway construction or maintenance work is being undertaken, other than mobile operations as defined by the Texas Manual on Uniform Traffic Control Devices, CSJ limit signs are required. CSJ limit signs are shown on BC(2). The OBEY WARNING SIGNS STATE LAW sign, STAY ALERT TALK OR TEXT LATER and the WORK ZONE TRAFFIC FINES DOUBLE sign with plaque shall be erected in advance of the CSJ limits. The BEGIN ROAD WORK NEXT X MILES, CONTRACTOR and END ROAD WORK signs shall be erected at or near the CSJ limits. For mobile operations, CSJ limit signs are not required.

11. Traffic control devices should be in place only while work is actually in progress or a definite need exists.

12. The Engineer has the final decision on the location of all traffic control devices.

13. Inactive equipment and work vehicles, including workers' private vehicles must be parked away from travel lanes. They should be as close to the right-of-way line as possible, or located behind a barrier or guardrail, or as approved by the Engineer.

WORKER SAFETY NOTES:

1. Workers on foot who are exposed to traffic or to construction equipment within the right-of-way shall wear high-visibility safety apparel meeting the requirements of ISEA "American National Standard for High-Visibility Apparel," or equivalent revisions, and labeled as ANSI 107-2004 standard performance for Class 2 or 3 risk exposure. Class 3 garments should be considered for high traffic volume work areas or night time work.

2. Except in emergency situations, flagger stations shall be illuminated when flagging is used at night.

COMPLIANT WORKZONE TRAFFIC CONTROL DEVICES

1. Only pre-qualified products shall be used. The "Compliant Work Zone Traffic Control Devices List" (CWZTCD) describes pre-qualified products and their sources.

2. Work zone traffic control devices shall be compliant with the Manual for Assessing safety Hardware (MASH).

THE DOCUMENTS BELOW CAN BE FOUND ON-LINE AT http://www.txdot.gov
COMPLIANT WORK ZONE TRAFFIC CONTROL DEVICES LIST (CWZTCD)
DEPARTMENTAL MATERIAL SPECIFICATIONS (DMS)
MATERIAL PRODUCER LIST (MPL)
ROADWAY DESIGN MANUAL - SEE "MANUALS (ONLINE MANUALS)"
STANDARD HIGHWAY SIGN DESIGNS FOR TEXAS (SHSD)
TEXAS MANUAL ON UNIFORM TRAFFIC CONTROL DEVICES (TMUTCD)
TRAFFIC ENGINEERING STANDARD SHEETS

Texas Department of Transportation

Traffic Safety Division Standard

BARRICADE AND CONSTRUCTION GENERAL NOTES AND REQUIREMENTS

BC(1)-21

FILE: bc-21.dgn	DN: TxDOT	CK: TxDOT	DW: TxDOT	CK: TxDOT
© TxDOT November 2002	CONT	SECT	JOB	HIGHWAY
REVISIONS 4-03 7-13 9-07 8-14 5-10 5-21	DIST	COUNTY		SHEET NO. 27

DATE:
FILE:

DISCLAIMER:
The use of this standard is governed by the "Texas Engineering Practice Act". No warranty of any kind is made by TxDOT for any purpose whatsoever. TxDOT assumes no responsibility for the conversion of this standard to other formats or for incorrect results or damages resulting from its use.

TYPICAL MINIMUM CLEARANCES FOR LONG TERM AND INTERMEDIATE TERM SIGNS

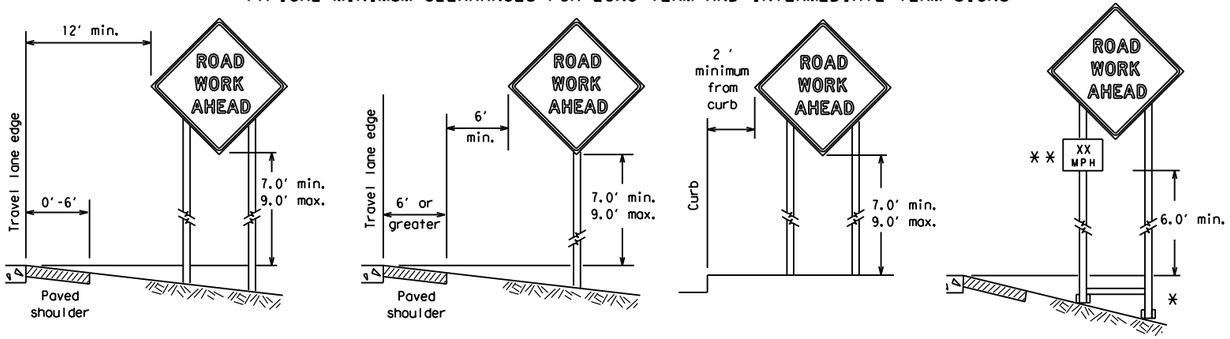

✱ When placing skid supports on unlevel ground, the leg post lengths must be adjusted so the sign appears straight and plumb. Objects shall NOT be placed under skids as a means of leveling.

✱✱ When plaques are placed on dual-leg supports, they should be attached to the upright nearest the travel lane. Supplemental plaques (advisory or distance) should not cover the surface of the parent sign.

ATTACHMENT FOR SIGN SUPPORTS

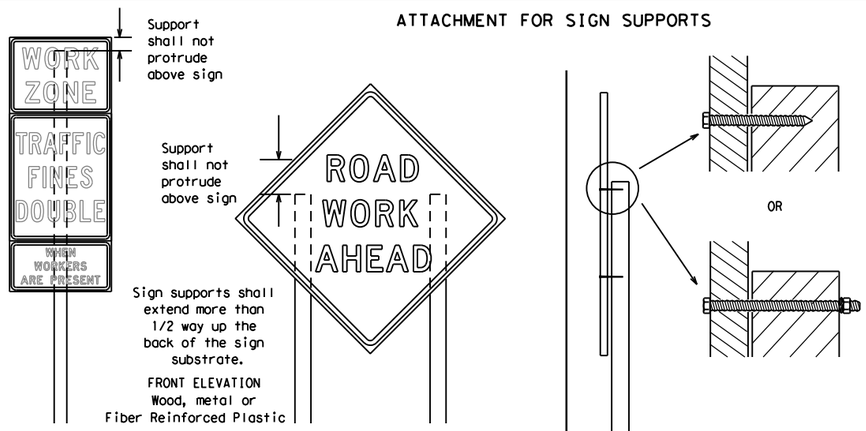

Attachment to wooden supports will be by bolts and nuts or screws. Use TxDOT's or manufacturer's recommended procedures for attaching sign substrates to other types of sign supports

Nails shall NOT be allowed. Each sign shall be attached directly to the sign support. Multiple signs shall not be joined or spliced by any means. Wood supports shall not be extended or repaired by splicing or other means.

Splicing embedded perforated square metal tubing in order to extend post height will only be allowed when the splice is made using four bolts, two above and two below the spice point. Splice must be located entirely behind the sign substrate, not near the base of the support. Splice insert lengths should be at least 5 times nominal post size, centered on the splice and of at least the same gauge material.

STOP/SLOW PADDLES

1. STOP/SLOW paddles are the primary method to control traffic by flaggers. The STOP/SLOW paddle size should be 24" x 24".
2. STOP/SLOW paddles shall be retroreflectorized when used at night.
3. STOP/SLOW paddles may be attached to a staff with a minimum length of 6' to the bottom of the sign.
4. Any lights incorporated into the STOP or SLOW paddle faces shall only be as specifically described in Section 6E.03 Hand Signaling Devices in the TMUTCD.

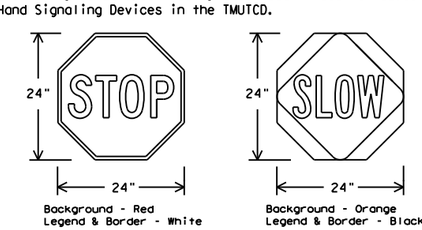

SHEETING REQUIREMENTS (WHEN USED AT NIGHT)		
USAGE	COLOR	SIGN FACE MATERIAL
BACKGROUND	RED	TYPE B OR C SHEETING
BACKGROUND	ORANGE	TYPE B_{FL} OR C_{FL} SHEETING
LEGEND & BORDER	WHITE	TYPE B OR C SHEETING
LEGEND & BORDER	BLACK	ACRYLIC NON-REFLECTIVE FILM

CONTRACTOR REQUIREMENTS FOR MAINTAINING PERMANENT SIGNS WITHIN THE PROJECT LIMITS

1. Permanent signs are used to give notice of traffic laws or regulations, call attention to conditions that are potentially hazardous to traffic operations, show route designations, destinations, directions, distances, services, points of interest, and other geographical, recreational, specific service (LOGO), or cultural information. Drivers proceeding through a work zone need the same, if not better route guidance as normally installed on a roadway without construction.
2. When permanent regulatory or warning signs conflict with work zone conditions, remove or cover the permanent signs until the permanent sign message matches the roadway condition. For details for covering large guide signs see the TS-CD standard.
3. When existing permanent signs are moved and relocated due to construction purposes, they shall be visible to motorists at all times.
4. If existing signs are to be relocated on their original supports, they shall be installed on crashworthy bases as shown on the SMD Standard sheets. The signs shall meet the required mounting heights shown on the BC Sheets or the SMD Standards. This work should be paid for under the appropriate pay item for relocating existing signs.
5. If permanent signs are to be removed and relocated using temporary supports, the Contractor shall use crashworthy supports as shown on the BC standard sheets, TLRS standard sheets or the CWZTCD list. The signs shall meet the required mounting heights shown on the BC, or the SMD standard sheets during construction. This work should be paid for under the appropriate pay item for relocating existing signs.
6. Any sign or traffic control device that is struck or damaged by the Contractor or his/her construction equipment shall be replaced as soon as possible by the Contractor to ensure proper guidance for the motorists. This will be subsidiary to Item 502.

GENERAL NOTES FOR WORK ZONE SIGNS

1. Contractor shall install and maintain signs in a straight and plumb condition and/or as directed by the Engineer.
2. Wooden sign posts shall be painted white.
3. Barricades shall NOT be used as sign supports.
4. All signs shall be installed in accordance with the plans or as directed by the Engineer. Signs shall be used to regulate, warn, and guide the traveling public safely through the work zone.
5. The Contractor may furnish either the sign design shown in the plans or in the "Standard Highway Sign Designs for Texas" (SHSD). The Engineer/Inspector may require the Contractor to furnish other work zone signs that are shown in the TMUTCD but may have been omitted from the plans. Any variation in the plans shall be documented by written agreement between the Engineer and the Contractor's Responsible Person. All changes must be documented in writing before being implemented. This can include documenting the changes in the Inspector's TxDOT diary and having both the Inspector and Contractor initial and date the agreed upon changes.
6. The Contractor shall furnish sign supports listed in the "Compliant Work Zone Traffic Control Device List" (CWZTCD) for small roadside signs. Supports for temporary large roadside signs shall meet the requirements detailed on the Temporary Large Roadside Signs (TLRS) standard sheets. The Contractor shall install the sign support in accordance with the manufacturer's recommendations. If there is a question regarding installation procedures, the Contractor shall furnish the Engineer a copy of the manufacturer's installation recommendations so the Engineer can verify the correct procedures are being followed.
7. The Contractor is responsible for installing signs on approved supports and replacing signs with damaged or cracked substrates and/or damaged or marred reflective sheeting as directed by the Engineer/Inspector.
8. Identification markings may be shown only on the back of the sign substrate. The maximum height of letters and/or company logos used for identification shall be 1 inch.
9. The Contractor shall replace damaged wood posts. New or damaged wood sign posts shall not be spliced.

DURATION OF WORK (as defined by the "Texas Manual on Uniform Traffic Control Devices" Part 6)

1. The types of sign supports, sign mounting height, the size of signs, and the type of sign substrates can vary based on the type of work being performed. The Engineer is responsible for selecting the appropriate size sign for the type of work being performed. The Contractor is responsible for ensuring the sign support, sign mounting height and substrate meets manufacturer's recommendations in regard to crashworthiness and duration of work requirements.
   a. Long-term stationary - work that occupies a location more than 3 days.
   b. Intermediate-term stationary - work that occupies a location more than one daylight period up to 3 days, or nighttime work lasting more than one hour.
   c. Short-term stationary - daytime work that occupies a location for more than 1 hour in a single daylight period.
   d. Short, duration - work that occupies a location up to 1 hour.
   e. Mobile - work that moves continuously or intermittently (stopping for up to approximately 15 minutes.)

SIGN MOUNTING HEIGHT

1. The bottom of Long-term/Intermediate-term signs shall be at least 7 feet, but not more than 9 feet, above the paved surface, except as shown for supplemental plaques mounted below other signs.
2. The bottom of Short-term/Short Duration signs shall be a minimum of 1 foot above the pavement surface but no more than 2 feet above the ground.
3. Long-term/Intermediate-term Signs may be used in lieu of Short-term/Short Duration signing.
4. Short-term/Short Duration signs shall be used only during daylight and shall be removed at the end of the workday or raised to appropriate Long-term/Intermediate sign height.
5. Regulatory signs shall be mounted at least 7 feet, but not more than 9 feet, above the paved surface regardless of work duration.

SIZE OF SIGNS

1. The Contractor shall furnish the sign sizes shown on BC (2) unless otherwise shown in the plans or as directed by the Engineer.

SIGN SUBSTRATES

1. The Contractor shall ensure the sign substrate is installed in accordance with the manufacturer's recommendations for the type of sign support that is being used. The CWZTCD lists each substrate that can be used on the different types and models of sign supports.
2. "Mesh" type materials are NOT an approved sign substrate, regardless of the tightness of the weave.
3. All wooden individual sign panels fabricated from 2 or more pieces shall have one or more plywood cleat, 1/2" thick by 6" wide, fastened to the back of the sign and extending fully across the sign. The cleat shall be attached to the back of the sign using wood screws that do not penetrate the face of the sign panel. The screws shall be placed on both sides of the splice and spaced at 6" centers. The Engineer may approve other methods of splicing the sign face.

REFLECTIVE SHEETING

1. All signs shall be retroreflective and constructed of sheeting meeting the color and retro-reflectivity requirements of DMS-8300 for rigid signs or DMS-8310 for roll-up signs. The web address for DMS specifications is shown on BC(1).
2. White sheeting, meeting the requirements of DMS-8300 Type A, shall be used for signs with a white background.
3. Orange sheeting, meeting the requirements of DMS-8300 Type B_{FL} or Type C_{FL}, shall be used for rigid signs with orange backgrounds.

SIGN LETTERS

1. All sign letters and numbers shall be clear, and open rounded type uppercase alphabet letters as approved by the Federal Highway Administration (FHWA) and as published in the "Standard Highway Sign Design for Texas" manual. Signs, letters and numbers shall be of first class workmanship in accordance with Department Standards and Specifications.

REMOVING OR COVERING

1. When sign messages may be confusing or do not apply, the signs shall be removed or completely covered.
2. Long-term stationary or intermediate stationary signs installed on square metal tubing may be turned away from traffic 90 degrees when the sign message is not applicable. This technique may not be used for signs installed in the median of divided highways or near any intersections where the sign may be seen from approaching traffic.
3. Signs installed on wooden skids shall not be turned at 90 degree angles to the roadway. These signs should be removed or completely covered when not required.
4. When signs are covered, the material used shall be opaque, such as heavy mil black plastic, or other materials which will cover the entire sign face and maintain their opaque properties under automobile headlights at night, without damaging the sign sheeting.
5. Burlap shall NOT be used to cover signs.
6. Duct tape or other adhesive material shall NOT be affixed to a sign face.
7. Signs and anchor stubs shall be removed and holes backfilled upon completion of work.

SIGN SUPPORT WEIGHTS

1. Where sign supports require the use of weights to keep from turning over, the use of sandbags with dry, cohesionless sand should be used.
2. The sandbags will be tied shut to keep the sand from spilling and to maintain a constant weight.
3. Rock, concrete, iron, steel or other solid objects shall not be permitted for use as sign support weights.
4. Sandbags should weigh a minimum of 35 lbs and a maximum of 50 lbs.
5. Sandbags shall be made of a durable material that tears upon vehicular impact. Rubber (such as tire inner tubes) shall NOT be used.
6. Rubber ballasts designed for channelizing devices should not be used for ballast on portable sign supports. Sign supports designed and manufactured with rubber bases may be used when shown on the CWZTCD list.
7. Sandbags shall only be placed along or laid over the base supports of the traffic control device and shall not be suspended above ground level or hung with rope, wire, chains or other fasteners. Sandbags shall be placed along the length of the skids to weigh down the sign support.
8. Sandbags shall NOT be placed under the skid and shall not be used to level sign supports placed on slopes.

FLAGS ON SIGNS

1. Flags may be used to draw attention to warning signs. When used, the flag shall be 16 inches square or larger and shall be orange or fluorescent red-orange in color. Flags shall not be allowed to cover any portion of the sign face.

Texas Department of Transportation — Traffic Safety Division Standard

BARRICADE AND CONSTRUCTION TEMPORARY SIGN NOTES

BC(4)-21

FILE: bc-21.dgn	DN: TxDOT	CK: TxDOT	DW: TxDOT	CK: TxDOT
©TxDOT November 2002	CONT	SECT	JOB	HIGHWAY
REVISIONS 9-07 8-14, 7-13 5-21	DIST		COUNTY	SHEET NO. 28

DATE:
FILE:

DISCLAIMER:
The use of this standard is governed by the "Texas Engineering Practice Act". No warranty of any kind is made by TxDOT for any purpose whatsoever. TxDOT assumes no responsibility for the conversion of this standard to other formats or for incorrect results or damages resulting from its use.

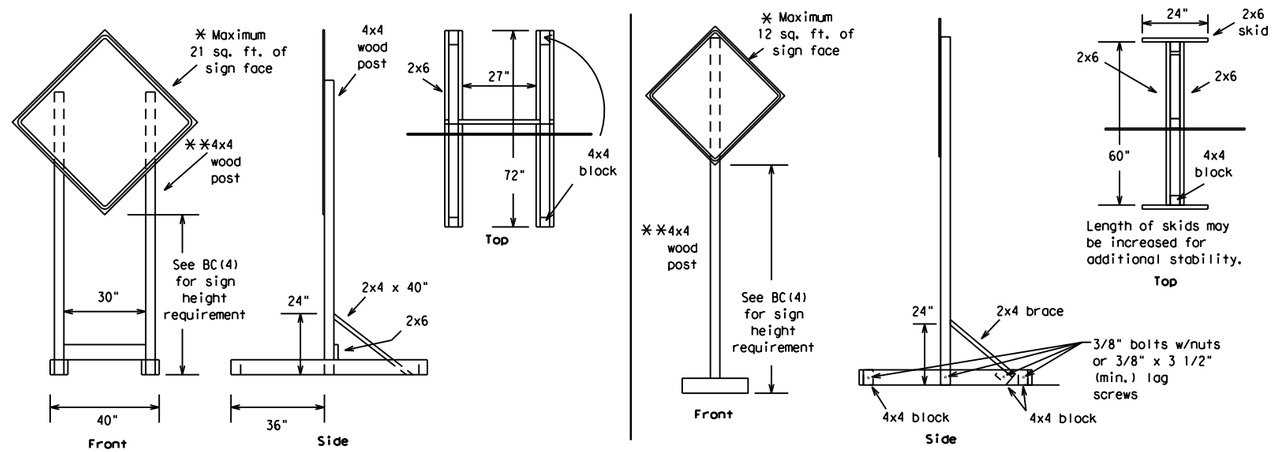

SKID MOUNTED WOOD SIGN SUPPORTS

* LONG/INTERMEDIATE TERM STATIONARY - PORTABLE SKID MOUNTED SIGN SUPPORTS

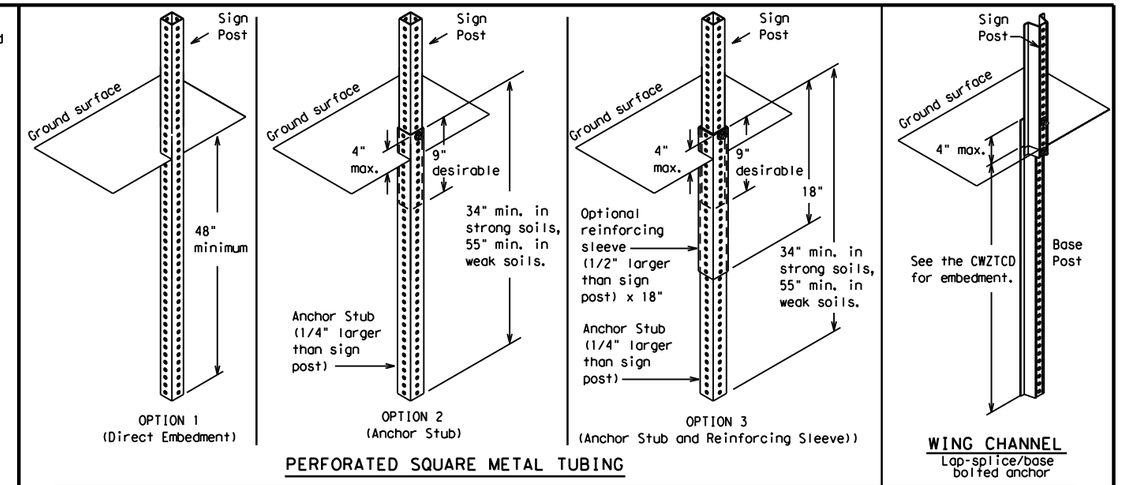

PERFORATED SQUARE METAL TUBING

WING CHANNEL
Lap-splice/base bolted anchor

GROUND MOUNTED SIGN SUPPORTS

Refer to the CWZTCD and the manufacturer's installation procedure for each type sign support.
The maximum sign square footage shall adhere to the manufacturer's recommendation.
Two post installations can be used for larger signs.

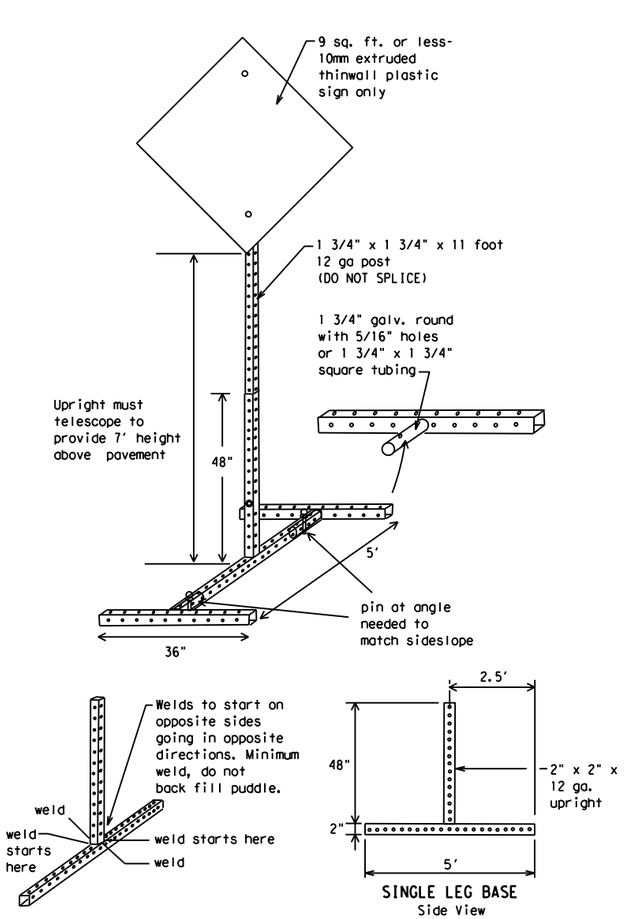

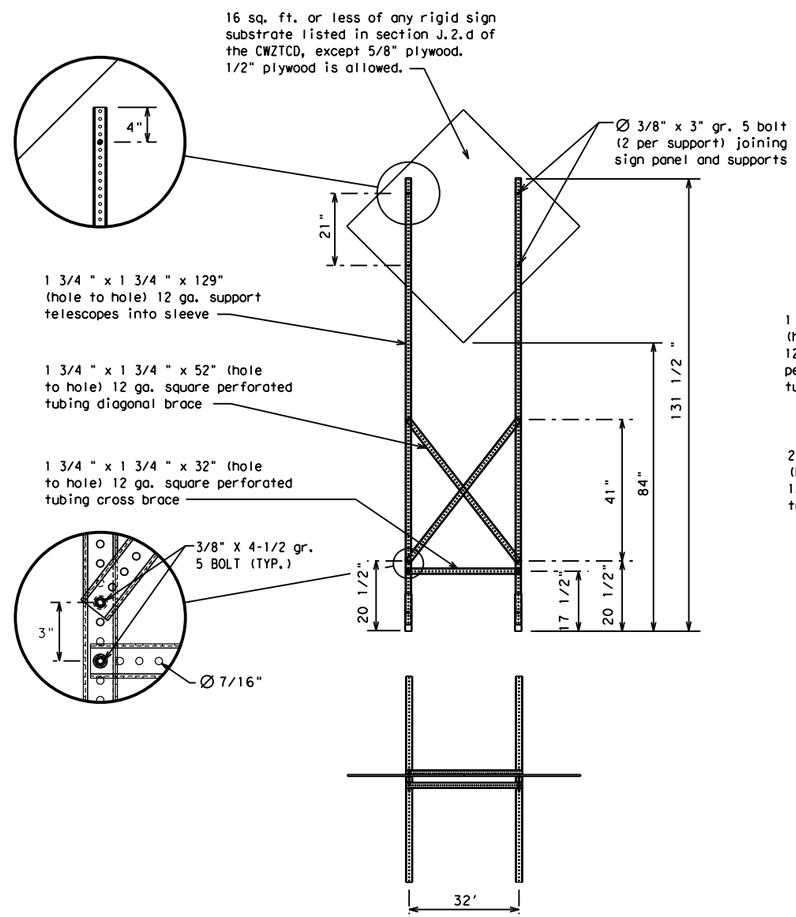

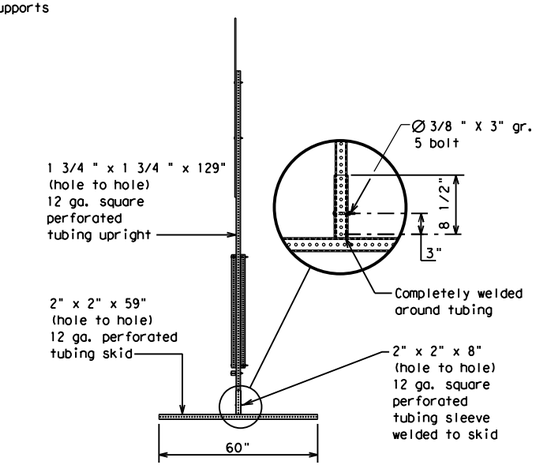

SKID MOUNTED PERFORATED SQUARE STEEL TUBING SIGN SUPPORTS

* LONG/INTERMEDIATE TERM STATIONARY - PORTABLE SKID MOUNTED SIGN SUPPORTS

WEDGE ANCHORS

Both steel and plastic Wedge Anchor Systems as shown on the SMD Standard Sheets may be used as temporary sign supports for signs up to 10 square feet of sign face. They may be set in concrete or in sturdy soils if approved by the Engineer. (See web address for "Traffic Engineering Standard Sheets" on BC(1)).

OTHER DESIGNS

MORE DETAILS OF APPROVED LONG/INTERMEDIATE AND SHORT TERM SUPPORTS CAN BE FOUND ON THE CWZTCD LIST. SEE BC(1) FOR WEBSITE LOCATION.

GENERAL NOTES

1. Nails may be used in the assembly of wooden sign supports, but 3/8" bolts with nuts or 3/8" x 3 1/2" lag screws must be used on every joint for final connection.
2. No more than 2 sign posts shall be placed within a 7 ft. circle, except for specific materials noted on the CWZTCD List.
3. When project is completed, all sign supports and foundations shall be removed from the project site. This will be considered subsidiary to Item 502.

* See BC(4) for definition of "Work Duration."

** Wood sign posts MUST be one piece. Splicing will NOT be allowed. Posts shall be painted white.

☐ See the CWZTCD for the type of sign substrate that can be used for each approved sign support.

Texas Department of Transportation — Traffic Safety Division Standard

BARRICADE AND CONSTRUCTION TYPICAL SIGN SUPPORT

BC(5)-21

FILE: bc-21.dgn	DN: TxDOT	CK: TxDOT	DW: TxDOT	CK: TxDOT
© TxDOT November 2002	CONT	SECT	JOB	HIGHWAY
REVISIONS				
9-07 8-14	DIST	COUNTY		SHEET NO.
7-13 5-21				29

DATE:
FILE:

DISCLAIMER:
The use of this standard is governed by the "Texas Engineering Practice Act". No warranty of any kind is made by TxDOT for any purpose whatsoever. TxDOT assumes no responsibility for the conversion of this standard to other formats or for incorrect results or damages resulting from its use.

1. Barrier Reflectors shall be pre-qualified, and conform to the color and reflectivity requirements of DMS-8600. A list of prequalified Barrier Reflectors can be found at the Material Producer List web address shown on BC(1).
2. Color of Barrier Reflectors shall be as specified in the TMUTCD. The cost of the reflectors shall be considered subsidiary to Item 512.

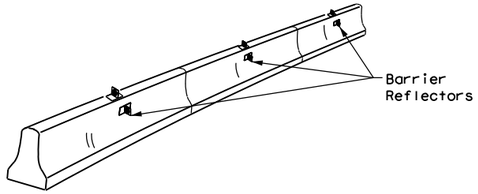

CONCRETE TRAFFIC BARRIER (CTB)

3. Where traffic is on one side of the CTB, two (2) Barrier Reflectors shall be mounted in approximately the midsection of each section of CTB. An alternate mounting location is uniformly spaced at one end of each CTB. This will allow for attachment of a barrier grapple without damaging the reflector. The Barrier Reflector mounted on the side of the CTB shall be located directly below the reflector mounted on top of the barrier, as shown in the detail above.
4. Where CTB separates two-way traffic, three barrier reflectors shall be mounted on each section of CTB. The reflector unit on top shall have two yellow reflective faces (Bi-Directional)while the reflectors on each side of the barrier shall have one yellow reflective face, as shown in the detail above.
5. When CTB separates traffic traveling in the same direction, no barrier reflectors will be required on top of the CTB.
6. Barrier Reflector units shall be yellow or white in color to match the edgeline being supplemented.
7. Maximum spacing of Barrier Reflectors is forty (40) feet.
8. Pavement markers or temporary flexible-reflective roadway marker tabs shall NOT be used as CTB delineation.
9. Attachment of Barrier Reflectors to CTB shall be per manufacturer's recommendations.
10. Missing or damaged Barrier Reflectors shall be replaced as directed by the Engineer.
11. Single slope barriers shall be delineated as shown on the above detail.

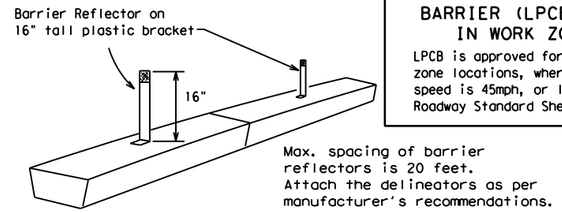

LOW PROFILE CONCRETE BARRIER (LPCB)

LOW PROFILE CONCRETE BARRIER (LPCB) USED IN WORK ZONES

LPCB is approved for use in work zone locations, where the posted speed is 45mph, or less. See Roadway Standard Sheet LPCB.

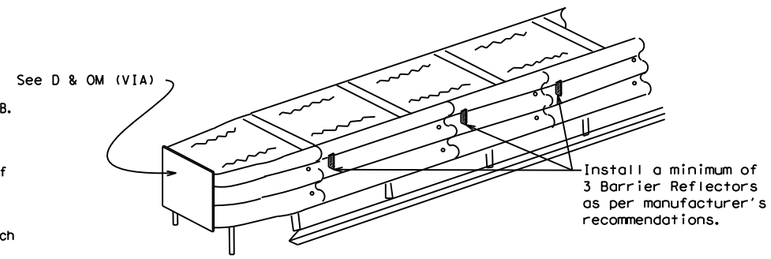

DELINEATION OF END TREATMENTS

END TREATMENTS FOR CTB'S USED IN WORK ZONES

End treatments used on CTB's in work zones shall meet the apppropriate crashworthy standards as defined in the Manual for Assessing Safety Hardware (MASH). Refer to the CWZTCD List for approved end treatments and manufacturers.

BARRIER REFLECTORS FOR CONCRETE TRAFFIC BARRIER AND ATTENUATORS

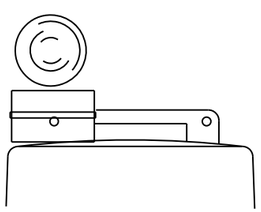

Type C Warning Light or approved substitute mounted on a drum adjacent to the travel way.

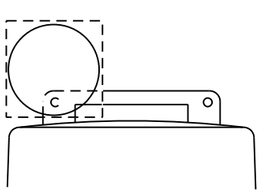

Warning reflector may be round or square.Must have a yellow reflective surface area of at least 30 square inches

WARNING LIGHTS

1. Warning lights shall meet the requirements of the TMUTCD.
2. Warning lights shall NOT be installed on barricades.
3. Type A-Low Intensity Flashing Warning Lights are commonly used with drums. They are intended to warn of or mark a potentially hazardous area. Their use shall be as indicated on this sheet and/or other sheets of the plans by the designation "FL". The Type A Warning Lights shall not be used with signs manufactured with Type B_{FL} or C_{FL} Sheeting meeting the requirements of Departmental Material Specification DMS-8300.
4. Type-C and Type D 360 degree Steady Burn Lights are intended to be used in a series for delineation to supplement other traffic control devices. Their use shall be as indicated on this sheet and/or other sheets of the plans by the designation "SB".
5. The Engineer/Inspector or the plans shall specify the location and type of warning lights to be installed on the traffic control devices.
6. When required by the Engineer, the Contractor shall furnish a copy of the warning lights certification. The warning light manufacturer will certify the warning lights meet the requirements of the latest ITE Purchase Specifications for Flashing and Steady-Burn Warning Lights.
7. When used to delineate curves, Type-C and Type D Steady Burn Lights should only be placed on the outside of the curve, not the inside.
8. The location of warning lights and warning reflectors on drums shall be as shown elsewhere in the plans.

WARNING LIGHTS MOUNTED ON PLASTIC DRUMS

1. Type A flashing warning lights are intended to warn drivers that they are approaching or are in a potentially hazardous area.
2. Type A random flashing warning lights are not intended for delineation and shall not be used in a series.
3. A series of sequential flashing warning lights placed on channelizing devices to form a merging taper may be used for delineation. If used, the successive flashing of the sequential warning lights should occur from the beginning of the taper to the end of the merging taper in order to identify the desired vehicle path. The rate of flashing for each light shall be 65 flashes per minute, plus or minus 10 flashes.
4. Type C and D steady-burn warning lights are intended to be used in a series to delineate the edge of the travel lane on detours, on lane changes, on lane closures, and on other similar conditions.
5. Type A, Type C and Type D warning lights shall be installed at locations as detailed on other sheets in the plans.
6. Warning lights shall not be installed on a drum that has a sign, chevron or vertical panel.
7. The maximum spacing for warning lights on drums should be identical to the channelizing device spacing.

WARNING REFLECTORS MOUNTED ON PLASTIC DRUMS AS A SUBSTITUTE FOR TYPE C (STEADY BURN) WARNING LIGHTS

1. A warning reflector or approved substitute may be mounted on a plastic drum as a substitute for a Type C, steady burn warning light at the discretion of the Contractor unless otherwise noted in the plans.
2. The warning reflector shall be yellow in color and shall be manufactured using a sign substrate approved for use with plastic drums listed on the CWZTCD.
3. The warning reflector shall have a minimum retroreflective surface area (one-side) of 30 square inches.
4. Round reflectors shall be fully reflectorized, including the area where attached to the drum.
5. Square substrates must have a minimum of 30 square inches of reflectorized sheeting. They do not have to be reflectorized where it attaches to the drum.
6. The side of the warning reflector facing approaching traffic shall have sheeting meeting the color and retroreflectivity requirements for DMS 8300-Type B or Type C.
7. When used near two-way traffic, both sides of the warning reflector shall be reflectorized.
8. The warning reflector should be mounted on the side of the handle nearest approaching traffic.
9. The maximum spacing for warning reflectors should be identical to the channelizing device spacing requirements.

Arrow Boards may be located behind channelizing devices in place for a shoulder taper or merging taper, otherwise they shall be delineated with four (4) channelizing devices placed perpendicular to traffic on the upstream side of traffic.

1. The Flashing Arrow Board should be used for all lane closures on multi-lane roadways, or slow moving maintenance or construction activities on the travel lanes.
2. Flashing Arrow Boards should not be used on two-lane, two-way roadways, detours, diversions or work on shoulders unless the "CAUTION" display (see detail below) is used.
3. The Engineer/Inspector shall choose all appropriate signs, barricades and/or other traffic control devices that should be used in conjunction with the Flashing Arrow Board.
4. The Flashing Arrow Board should be able to display the following symbols:

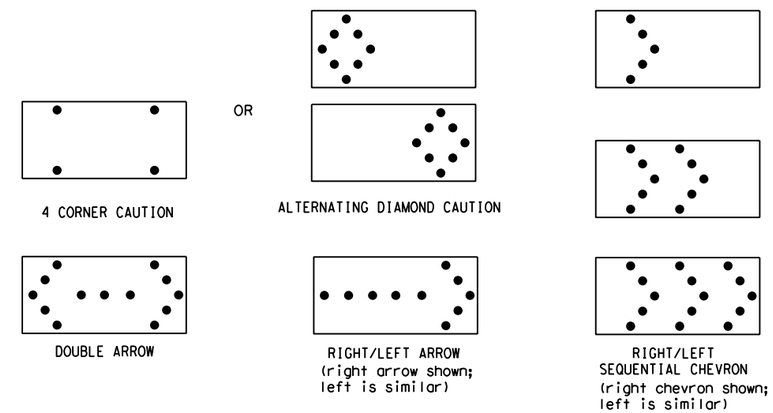

5. The "CAUTION" display consists of four corner lamps flashing simultaneously, or the Alternating Diamond Caution mode as shown.
6. The straight line caution display is NOT ALLOWED.
7. The Flashing Arrow Board shall be capable of minimum 50 percent dimming from rated lamp voltage. The flashing rate of the lamps shall not be less than 25 nor more than 40 flashes per minute.
8. Minimum lamp "on time" shall be approximately 50 percent for the flashing arrow and equal intervals of 25 percent for each sequential phase of the flashing chevron.
9. The sequential arrow display is NOT ALLOWED.
10. The flashing arrow display is the TxDOT standard; however, the sequential chevron display may be used during daylight operations.
11. The Flashing Arrow Board shall be mounted on a vehicle, trailer or other suitable support.
12. A Flashing Arrow Board SHALL NOT BE USED to laterally shift traffic.
13. A full matrix PCMS may be used to simulate a Flashing Arrow Board provided it meets visibility, flash rate and dimming requirements on this sheet for the same size arrow.
14. Minimum mounting height of trailer mounted Arrow Boards should be 7 feet from roadway to bottom of panel.

REQUIREMENTS			
TYPE	MINIMUM SIZE	MINIMUM NUMBER OF PANEL LAMPS	MINIMUM VISIBILITY DISTANCE
B	30 x 60	13	3/4 mile
C	48 x 96	15	1 mile

ATTENTION

Flashing Arrow Boards shall be equipped with automatic dimming devices.

WHEN NOT IN USE, REMOVE THE ARROW BOARD FROM THE RIGHT-OF-WAY OR PLACE THE ARROW BOARD BEHIND CONCRETE TRAFFIC BARRIER OR GUARDRAIL.

FLASHING ARROW BOARDS

TRUCK-MOUNTED ATTENUATORS

1. Truck-mounted attenuators (TMA) used on TxDOT facilities must meet the requirements outlined in the Manual for Assessing Safety Hardware (MASH).
2. Refer to the CWZTCD for the requirements of Level 2 or Level 3 TMAs.
3. Refer to the CWZTCD for a list of approved TMAs.
4. TMAs are required on freeways unless otherwise noted in the plans.
5. A TMA should be used anytime that it can be positioned 30 to 100 feet in advance of the area of crew exposure without adversely affecting the work performance.
6. The only reason a TMA should not be required is when a work area is spread down the roadway and the work crew is an extended distance from the TMA.

Texas Department of Transportation — Traffic Safety Division Standard

BARRICADE AND CONSTRUCTION ARROW PANEL, REFLECTORS, WARNING LIGHTS & ATTENUATOR

BC(7)-21

FILE: bc-21.dgn	DN: TxDOT	CK: TxDOT	DW: TxDOT	CK: TxDOT
© TxDOT November 2002	CONT	SECT	JOB	HIGHWAY
REVISIONS 9-07 8-14, 7-13 5-21	DIST	COUNTY		SHEET NO. 30

101

DATE:
FILE:

DISCLAIMER:
The use of this standard is governed by the "Texas Engineering Practice Act". No warranty of any kind is made by TxDOT for any purpose whatsoever. TxDOT assumes no responsibility for the conversion of this standard to other formats or for incorrect results or damages resulting from its use.

GENERAL NOTES

1. For long term stationary work zones on freeways, drums shall be used as the primary channelizing device.
2. For intermediate term stationary work zones on freeways, drums should be used as the primary channelizing device but may be replaced in tangent sections by vertical panels, or 42" two-piece cones. In tangent sections, one-piece cones may be used with the approval of the Engineer but only if personnel are present on the project at all times to maintain the cones in proper position and location.
3. For short term stationary work zones on freeways, drums are the preferred channelizing device but may be replaced in tapers, transitions and tangent sections by vertical panels, two-piece cones or one-piece cones as approved by the Engineer.
4. Drums and all related items shall comply with the requirements of the current version of the "Texas Manual on Uniform Traffic Control Devices" (TMUTCD) and the "Compliant Work Zone Traffic Control Devices List" (CWZTCD).
5. Drums, bases, and related materials shall exhibit good workmanship and shall be free from objectionable marks or defects that would adversely affect their appearance or serviceability.
6. The Contractor shall have a maximum of 24 hours to replace any plastic drums identified for replacement by the Engineer/Inspector. The replacement device must be an approved device.

GENERAL DESIGN REQUIREMENTS

Pre-qualified plastic drums shall meet the following requirements:

1. Plastic drums shall be a two-piece design; the "body" of the drum shall be the top portion and the "base" shall be the bottom.
2. The body and base shall lock together in such a manner that the body separates from the base when impacted by a vehicle traveling at a speed of 20 MPH or greater but prevents accidental separation due to normal handling and/or air turbulence created by passing vehicles.
3. Plastic drums shall be constructed of lightweight flexible, and deformable materials. The Contractor shall NOT use metal drums or single piece plastic drums as channelization devices or sign supports.
4. Drums shall present a profile that is a minimum of 18 inches in width at the 36 inch height when viewed from any direction. The height of drum unit (body installed on base) shall be a minimum of 36 inches and a maximum of 42 inches.
5. The top of the drum shall have a built-in handle for easy pickup and shall be designed to drain water and not collect debris. The handle shall have a minimum of two widely spaced 9/16 inch diameter holes to allow attachment of a warning light, warning reflector unit or approved compliant sign.
6. The exterior of the drum body shall have a minimum of four alternating orange and white retroreflective circumferential stripes not less than 4 inches nor greater than 8 inches in width. Any non-reflectorized space between any two adjacent stripes shall not exceed 2 inches in width.
7. Bases shall have a maximum width of 36 inches, a maximum height of 4 inches, and a minimum of two footholds of sufficient size to allow base to be held down while separating the drum body from the base.
8. Plastic drums shall be constructed of ultra-violet stabilized, orange, high-density polyethylene (HDPE) or other approved material.
9. Drum body shall have a maximum unballasted weight of 11 lbs.
10. Drum and base shall be marked with manufacturer's name and model number.

RETROREFLECTIVE SHEETING

1. The stripes used on drums shall be constructed of sheeting meeting the color and retroreflectivity requirements of Departmental Materials Specification DMS-8300, "Sign Face Materials." Type A or Type B reflective sheeting shall be supplied unless otherwise specified in the plans.
2. The sheeting shall be suitable for use on and shall adhere to the drum surface such that, upon vehicular impact, the sheeting shall remain adhered in-place and exhibit no delaminating, cracking, or loss of retroreflectivity other than that loss due to abrasion of the sheeting surface.

BALLAST

1. Unballasted bases shall be large enough to hold up to 50 lbs. of sand. This base, when filled with the ballast material, should weigh between 35 lbs (minimum) and 50 lbs (maximum). The ballast may be sand in one to three sandbags separate from the base, sand in a sand-filled plastic base, or other ballasting devices as approved by the Engineer. Stacking of sandbags will be allowed, however height of sandbags above pavement surface may not exceed 12 inches.
2. Bases with built-in ballast shall weigh between 40 lbs. and 50 lbs. Built-in ballast can be constructed of an integral crumb rubber base or a solid rubber base.
3. Recycled truck tire sidewalls may be used for ballast on drums approved for this type of ballast on the CWZTCD list.
4. The ballast shall not be heavy objects, water, or any material that would become hazardous to motorists, pedestrians, or workers when the drum is struck by a vehicle.
5. When used in regions susceptible to freezing, drums shall have drainage holes in the bottoms so that water will not collect and freeze becoming a hazard when struck by a vehicle.
6. Ballast shall not be placed on top of drums.
7. Adhesives may be used to secure base of drums to pavement.

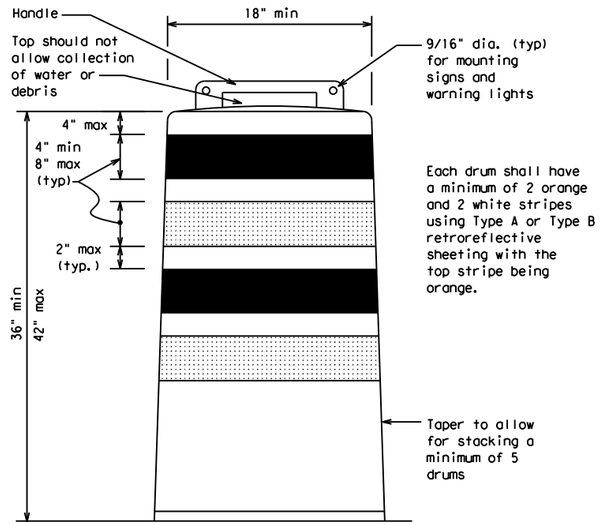

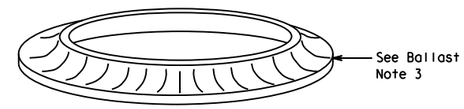

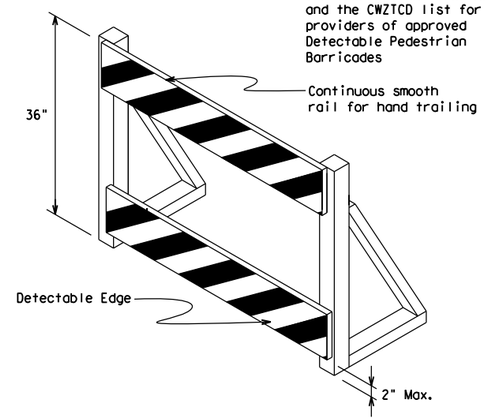

DETECTABLE PEDESTRIAN BARRICADES

1. When existing pedestrian facilities are disrupted, closed, or relocated in a TTC zone, the temporary facilities shall be detectable and include accessibility features consistent with the features present in the existing pedestrian facility. Refer to WZ(BTS-2) for Pedestrian Control requirements for Sidewalk Diversions, Sidewalk Detours and Crosswalk Closures.
2. Where pedestrians with visual disabilities normally use the closed sidewalk, a Detectable Pedestrian Barricade shall be placed across the full width of the closed sidewalk instead of a Type 3 Barricade.
3. Detectable pedestrian barricades similar to the one pictured above, longitudinal channelizing devices, some concrete barriers, and wood or chain link fencing with a continuous detectable edging can satisfactorily delineate a pedestrian path.
4. Tape, rope, or plastic chain strung between devices are not detectable, do not comply with the design standards in the "Americans with Disabilities Act Accessibility Guidelines (ADAAG)" and should not be used as a control for pedestrian movements.
5. Warning lights shall not be attached to detectable pedestrian barricades.
6. Detectable pedestrian barricades should use 8" nominal barricade rails as shown on BC(10) provided that the top rail provides a smooth continuous rail suitable for hand trailing with no splinters, burrs, or sharp edges.

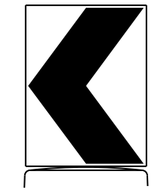

18" x 24" Sign
(Maximum Sign Dimension)
Chevron CW1-8, Opposing Traffic Lane Divider, Driveway sign D70a, Keep Right R4 series or other signs as approved by Engineer

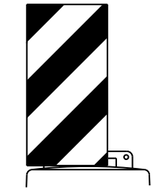

12" x 24"
Vertical Panel
mount with diagonals sloping down towards travel way

Plywood, Aluminum or Metal sign substrates shall NOT be used on plastic drums

SIGNS, CHEVRONS, AND VERTICAL PANELS MOUNTED ON PLASTIC DRUMS

1. Signs used on plastic drums shall be manufactured using substrates listed on the CWZTCD.
2. Chevrons and other work zone signs with an orange background shall be manufactured with Type B_{FL} or Type C_{FL} Orange sheeting meeting the color and retroreflectivity requirements of DMS-8300, "Sign Face Material," unless otherwise specified in the plans.
3. Vertical Panels shall be manufactured with orange and white sheeting meeting the requirements of DMS-8300 Type A or Type B. Diagonal stripes on Vertical Panels shall slope down toward the intended traveled lane.
4. Other sign messages (text or symbolic) may be used as approved by the Engineer. Sign dimensions shall not exceed 18 inches in width or 24 inches in height, except for the R9 series signs discussed in note 8 below.
5. Signs shall be installed using a 1/2 inch bolt (nominal) and nut, two washers, and one locking washer for each connection.
6. Mounting bolts and nuts shall be fully engaged and adequately torqued. Bolts should not extend more than 1/2 inch beyond nuts.
7. Chevrons may be placed on drums on the outside of curves, on merging tapers or on shifting tapers. When used in these locations, they may be placed on every drum or spaced not more than on every third drum. A minimum of three (3) should be used at each location called for in the plans.
8. R9-9, R9-10, R9-11 and R9-11a Sidewalk Closed signs which are 24 inches wide may be mounted on plastic drums, with approval of the Engineer.

Texas Department of Transportation — Traffic Safety Division Standard

BARRICADE AND CONSTRUCTION CHANNELIZING DEVICES

BC(8)-21

FILE: bc-21.dgn	DN: TxDOT	CK: TxDOT	DW: TxDOT	CK: TxDOT
©TxDOT November 2002	CONT	SECT	JOB	HIGHWAY
REVISIONS 4-03 8-14, 9-07 5-21, 7-13	DIST	COUNTY		SHEET NO. 31

DATE:
FILE:

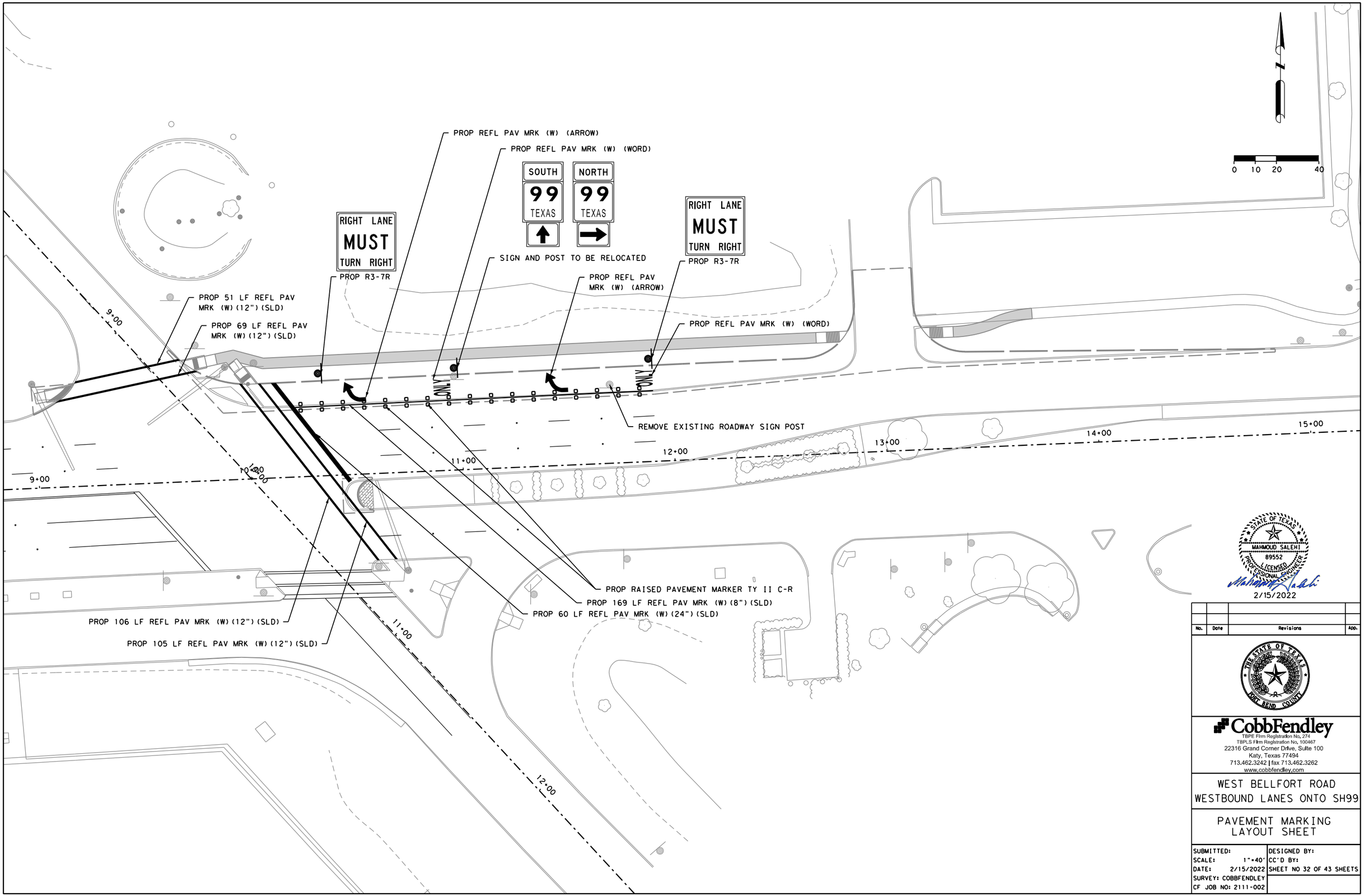

STATE OF TEXAS
MAHMOUD SALEHI
89552
LICENSED
PROFESSIONAL ENGINEER
2/15/2022

No.	Date	Revisions	App.

THE STATE OF TEXAS
FORT BEND COUNTY

CobbFendley
TBPE Firm Registration No. 274
TBPLS Firm Registration No. 100467
22316 Grand Corner Drive, Suite 100
Katy, Texas 77494
713.462.3242 | fax 713.462.3262
www.cobbfendley.com

WEST BELLFORT ROAD
WESTBOUND LANES ONTO SH99

PAVEMENT MARKING
LAYOUT SHEET

SUBMITTED:	DESIGNED BY:
SCALE: 1"=40'	CC'D BY:
DATE: 2/15/2022	SHEET NO 32 OF 43 SHEETS
SURVEY: COBBFENDLEY	
CF JOB NO: 2111-002	

3:03:34 PM
2/15/2022
B:\Projects\2021\11002*Ft*Bend*County*Engineering\03*West*Belfort*Street*WB*lanes*onto*SH*99\400*CAD\411*Trans\09-SPMK\211100203*PMK01.dgn

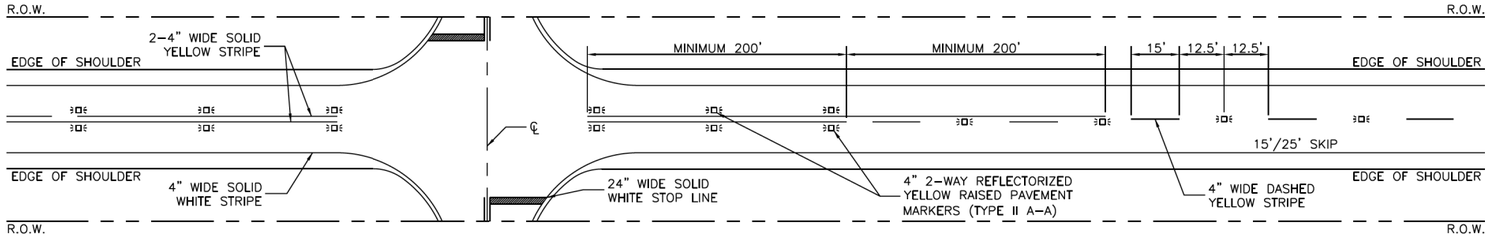

TYPICAL TWO LANE TWO-WAY ROAD

TYPICAL TWO-WAY LEFT TURN SECTION

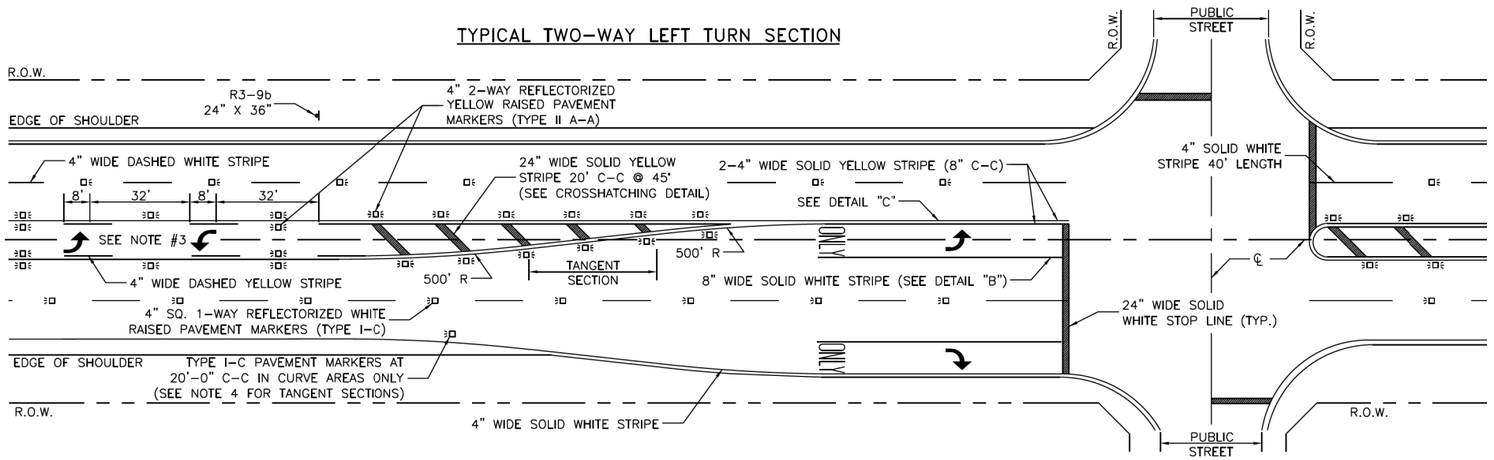

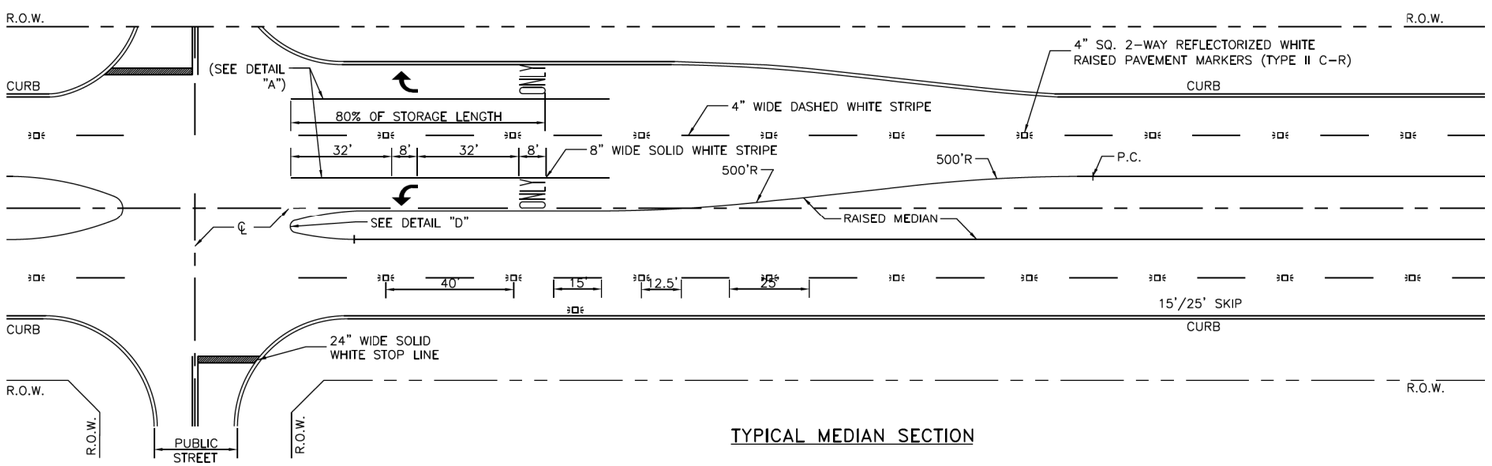

TYPICAL MEDIAN SECTION

NOTES:

1. ALL PAVEMENT MARKINGS SHALL CONFORM TO THE LATEST EDITION OF THE TEXAS MANUAL ON UNIFORM TRAFFIC CONTROL DEVICES FOR STREETS AND HIGHWAYS (TMUTCD).
2. ALL TRAFFIC BUTTONS AND MARKERS SHALL BE INSTALLED ADJACENT TO STRIPES (APPROXIMATELY 2").
3. REPEAT ARROWS AT APPROXIMATELY 1000' INTERVALS WITHIN TWO-WAY LEFT TURN SECTION.
4. WITHIN A TANGENT SECTION THE TYPE I-C PAVEMENT MARKERS SHALL BE PLACED AT 40' C-C ON ROADWAYS WITHOUT CURB AND GUTTERS.
5. WHEN PAVEMENT MARKINGS EXTEND INTO OR CONTINUE THROUGH AN INTERSECTION AREA, THEY SHALL BE THE SAME COLOR AND AT LEAST THE SAME WIDTH AS THE LINE MARKINGS THEY EXTEND.
6. WHEN CROSSWALK MARKINGS ARE USED WITHIN AN ESTABLISHED SCHOOL ZONE, MID-BLOCK, OR AT UNCONTROLLED INTERSECTIONS, CROSSWALK SHALL BE CONTINENTAL STYLE.
7. ADDITIONAL SET OF "WORD" AND "ARROW" PAVEMENT MARKINGS SHALL BE USED WHEN TURN LANE STORAGE LENGTH IS 160 FEET OR GREATER.

CROSSHATCHING DETAIL

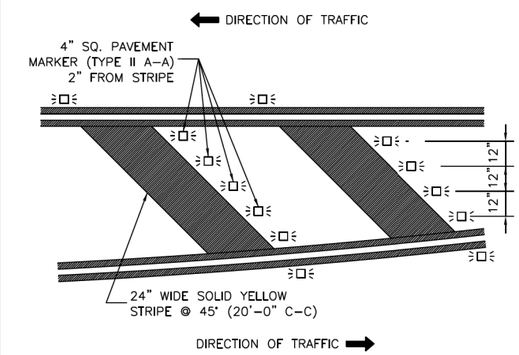

OUTSIDE EDGE CROSSHATCHING DETAIL

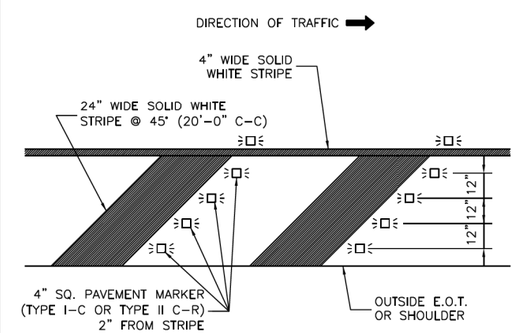

STATE OF TEXAS
MAHMOUD SALEHI
89552
LICENSED PROFESSIONAL ENGINEER
2/11/2022

No.	Date	Revisions	App.

THE STATE OF TEXAS
FORT BEND COUNTY

CobbFendley
TBPE Firm Registration No. 274
TBPLS Firm Registration No. 100467
22316 Grand Corner Drive, Suite 100
Katy, Texas 77494
713.462.3242 | fax 713.462.3262
www.cobbfendley.com

WEST BELLFORT ROAD
WESTBOUND LANES ONTO SH99

PAVEMENT MARKING DETAILS
SHEET 1 OF 2

SUBMITTED:	DESIGNED BY:
SCALE: N/A	CC'D BY:
DATE: 2/11/2022	SHEET NO 33 OF 43 SHEETS
SURVEY: COBBFENDLEY	
CF JOB NO: 2111-002	

4:04:21 PM
2/11/2022
B:\Projects\2021\11002ft+BendCounty+Engineering\03+West+Belfort+Street+WB+lanes+onto+SH99\400+CAD\411+Trans\11-Details\211100203+PMKDET01.dgn

DETAIL "A"
(FOR DIVIDED ROADWAYS)

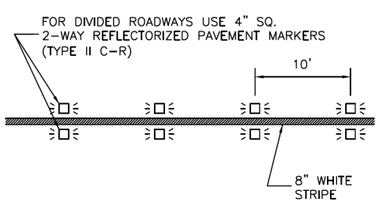

DETAIL "B"
(FOR UNDIVIDED ROADWAYS)

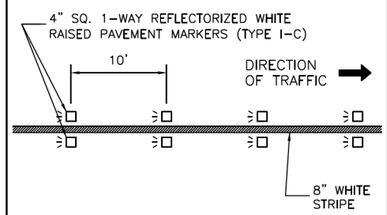

DETAIL "C"

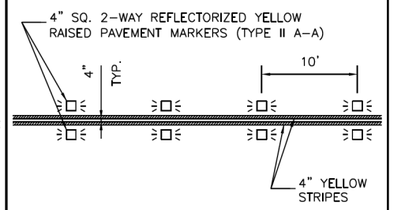

DETAIL "D"

* PAINT FROM THE BACK OF CURB TO THE GUTTER LINE

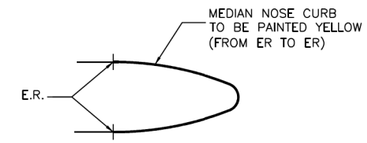

TYPICAL MEDIAN NOSE

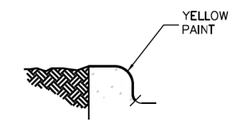

TYPICAL CURB SECTION

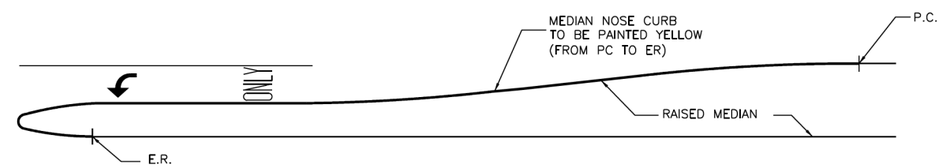

RAISED MEDIAN WITH TURN BAY

PAVEMENT MARKER LEGEND

SYMBOL	DESCRIPTION
	4" x 4" REFLECTORIZED RAISED PAVEMENT MARKER
	INDICATED DIRECTION OF TRAFFIC FLOW

YIELD LINE DETAILS

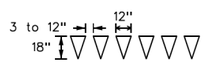

FOR POSTED SPEED ON ROAD BEING MARKED EQUAL TO OR LESS THAN 40 MPH.

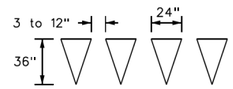

FOR POSTED SPEED ON ROAD BEING MARKED EQUAL TO OR GREATER THAN 45 MPH

TYPICAL CROSSWALK PLACEMENT

CONTINENTAL TYPE

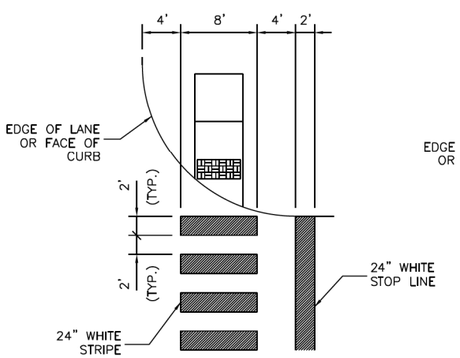

STANDARD TYPE

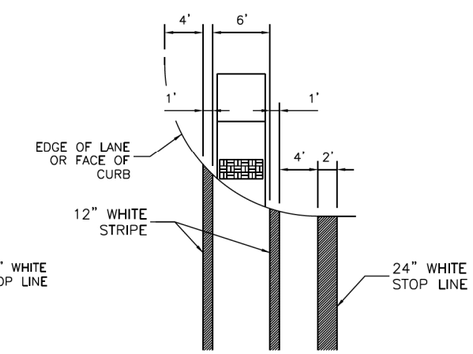

CENTER LINE DETAIL CURVE SECTION

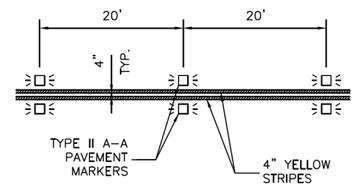

TWO-WAY LEFT TURN CURVE SECTION

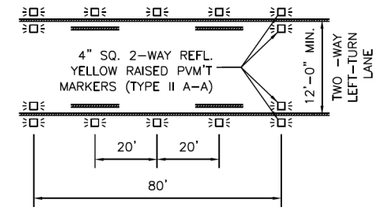

CENTER LINE DETAIL TANGENT SECTION

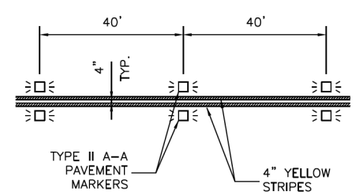

TWO-WAY LEFT TURN TANGENT SECTION

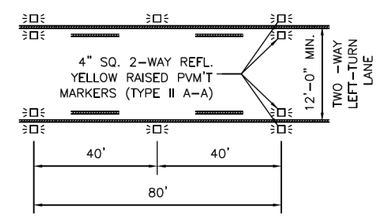

RAISED PAVEMENT MARKERS

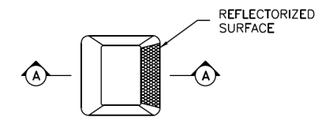

TYPE I (TOP VIEW)

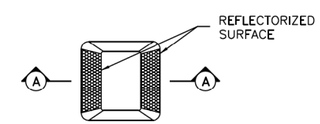

TYPE II (TOP VIEW)

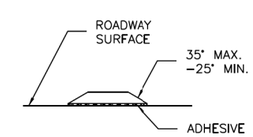

SECTION A-A

STATE OF TEXAS
MAHMOUD SALEHI
89552
LICENSED
PROFESSIONAL ENGINEER
2/11/2022

No.	Date	Revisions	App.

THE STATE OF TEXAS
FORT BEND COUNTY

CobbFendley
TBPE Firm Registration No. 274
TBPLS Firm Registration No. 100467
22316 Grand Corner Drive, Suite 100
Katy, Texas 77494
713.462.3242 | fax 713.462.3262
www.cobbfendley.com

WEST BELLFORT ROAD
WESTBOUND LANES ONTO SH99

PAVEMENT MARKING DETAILS
SHEET 2 OF 2

SUBMITTED:	DESIGNED BY:
SCALE: N/A	CC'D BY:
DATE: 2/11/2022	SHEET NO 34 OF 43 SHEETS
SURVEY: COBBFENDLEY	
CF JOB NO: 2111-002	

4:04:25 PM
2/11/2022
B:\Projects\2021\11002*Ft*Bend*County*Engineering\03*West*Bellfort*Street*WB*lanes*onto*SH*99\400*CAD\411*Trans\11-Details\211100203*PMKDET02.dgn

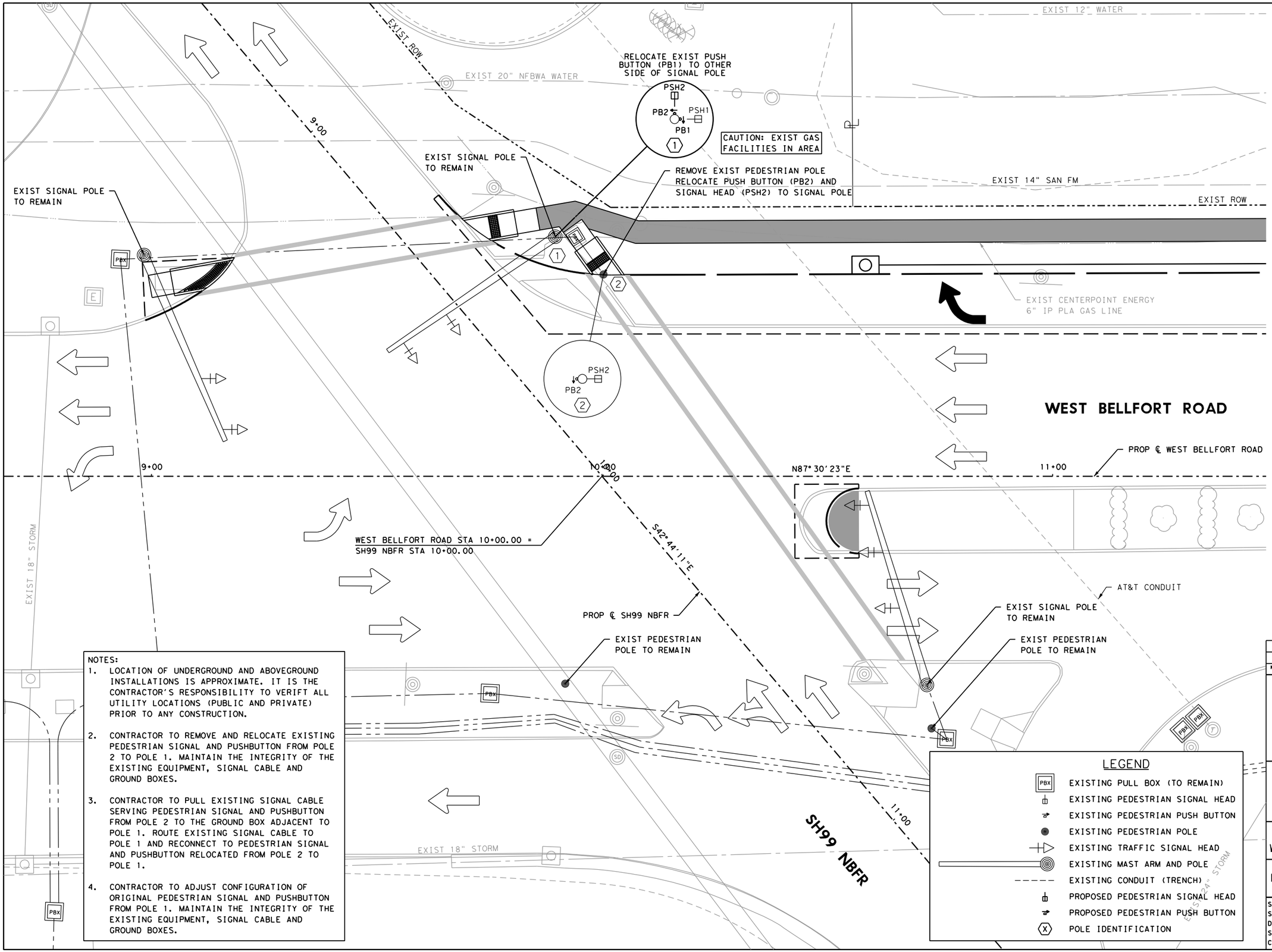

NOTES:

1. LOCATION OF UNDERGROUND AND ABOVEGROUND INSTALLATIONS IS APPROXIMATE. IT IS THE CONTRACTOR'S RESPONSIBILITY TO VERIFT ALL UTILITY LOCATIONS (PUBLIC AND PRIVATE) PRIOR TO ANY CONSTRUCTION.
2. CONTRACTOR TO REMOVE AND RELOCATE EXISTING PEDESTRIAN SIGNAL AND PUSHBUTTON FROM POLE 2 TO POLE 1. MAINTAIN THE INTEGRITY OF THE EXISTING EQUIPMENT, SIGNAL CABLE AND GROUND BOXES.
3. CONTRACTOR TO PULL EXISTING SIGNAL CABLE SERVING PEDESTRIAN SIGNAL AND PUSHBUTTON FROM POLE 2 TO THE GROUND BOX ADJACENT TO POLE 1. ROUTE EXISTING SIGNAL CABLE TO POLE 1 AND RECONNECT TO PEDESTRIAN SIGNAL AND PUSHBUTTON RELOCATED FROM POLE 2 TO POLE 1.
4. CONTRACTOR TO ADJUST CONFIGURATION OF ORIGINAL PEDESTRIAN SIGNAL AND PUSHBUTTON FROM POLE 1. MAINTAIN THE INTEGRITY OF THE EXISTING EQUIPMENT, SIGNAL CABLE AND GROUND BOXES.

LEGEND

PBX	EXISTING PULL BOX (TO REMAIN)
	EXISTING PEDESTRIAN SIGNAL HEAD
	EXISTING PEDESTRIAN PUSH BUTTON
	EXISTING PEDESTRIAN POLE
	EXISTING TRAFFIC SIGNAL HEAD
	EXISTING MAST ARM AND POLE
	EXISTING CONDUIT (TRENCH)
	PROPOSED PEDESTRIAN SIGNAL HEAD
	PROPOSED PEDESTRIAN PUSH BUTTON
X	POLE IDENTIFICATION

STATE OF TEXAS
MAHMOUD SALEHI
89552
LICENSED
PROFESSIONAL ENGINEER
2/11/2022

No.	Date	Revisions	App.

THE STATE OF TEXAS
FORT BEND COUNTY

CobbFendley
TBPE Firm Registration No. 274
TBPLS Firm Registration No. 100467
22316 Grand Corner Drive, Suite 100
Katy, Texas 77494
713.462.3242 | fax 713.462.3262
www.cobbfendley.com

WEST BELLFORT ROAD
WESTBOUND LANES ONTO SH99

PROPOSED SIGNAL LAYOUT

SUBMITTED:	DESIGNED BY:
SCALE: 1"=10'	CC'D BY:
DATE: 2/11/2022	SHEET NO 36 OF 43 SHEETS
SURVEY: COBBFENDLEY	
CF JOB NO: 2111-002	

4:04:29 PM
2/11/2022
B:\Projects\2021\11002-Ft+Bend+County+Engineering\03+West+Belfort+Street+WB+lanes+onto+SH+99\400+CAD\411+Trans\12-Traffic\211100203+SIGNAL+01.dgn

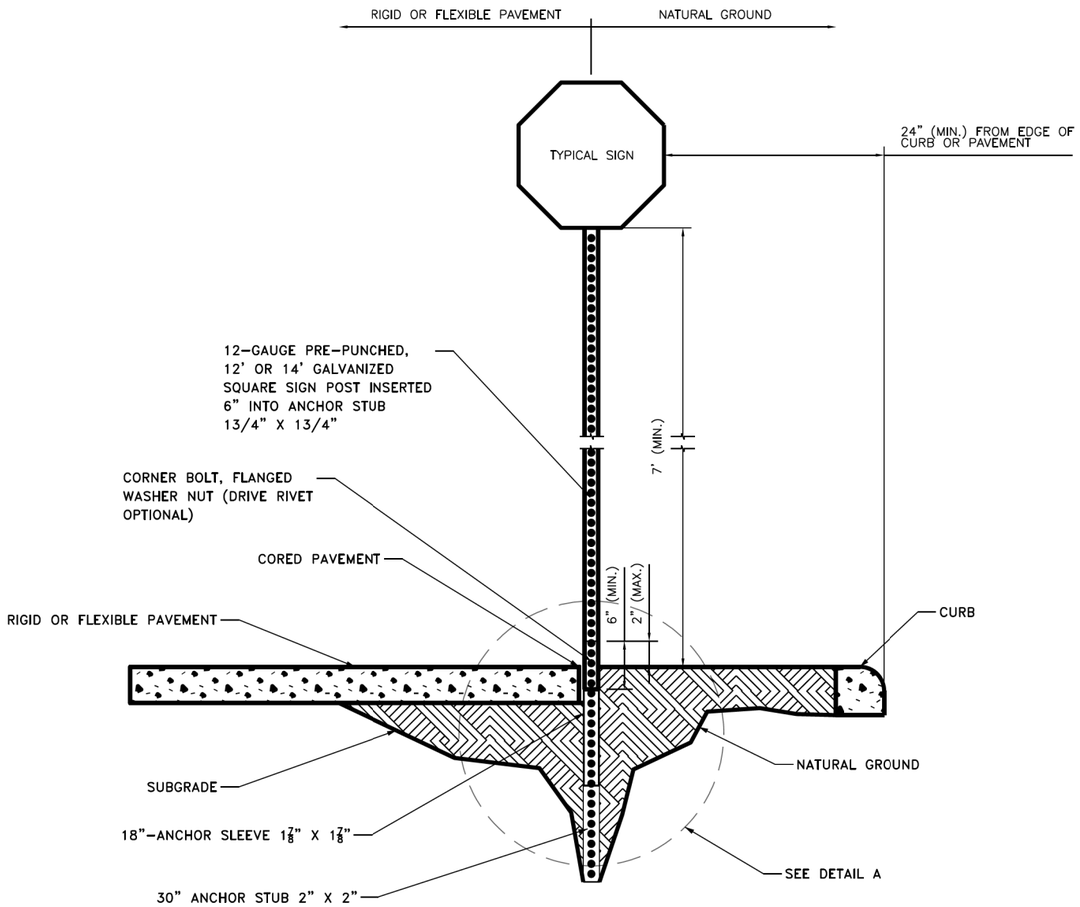

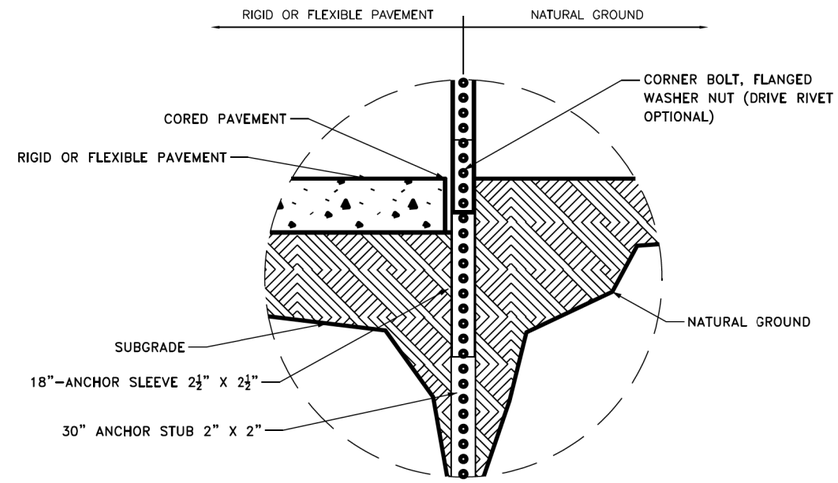

TYPICAL GROUND SIGN INSTALLATION
DETAIL A

NOTES:

1. THE CROSS SECTION OF ALL MEMBERS SHALL BE SQUARE TUBE FORMED OF 12 GAUGE AND MANUFACTURED FROM HOT-GALVANIZED STEEL
2. THE TELESCOPE BREAKAWAY SYSTEM OR "SYSTEM" IS DEFINED AS FOLLOW:
   - A MINIMUM 30" ANCHOR STUB;
   - 18" ANCHOR SLEEVE.
3. DRIVE THE SYSTEM TOGETHER MAKING SURE THE HOLES ARE ALIGNED.
4. THE SYSTEM IS TO BE DRIVEN INTO NATURAL GROUND EXPOSED SUBGRADE UNTIL ONLY 1 TO 2 INCHES ARE LEFT EXPOSED.
5. ATTACH THE SIGN TO AN 1 3/4" SQUARE POST AT THE DESIRED HEIGHT, SUCH THAT IT MEETS THE MINIMUM VERTICAL CLEARANCE.
6. SIGNS ARE FASTENED TO THE POST BY USING DRIVE RIVETS OR BOLTS.
7. INSERT THE SIGN POST APPROXIMATELY 6 TO 8 INCHES INTO THE ANCHOR BASE.
8. BOLT THE SIGN POST TO THE ANCHOR ASSEMBLY WITH A CORNER BOLT.
9. WHEN INSTALLING IN RIGID OR FLEXIBLE PAVEMENT, USE A CORING MACHINE TO EXPOSE THE SUBGRADE MATERIAL AND INSTALL THE SYSTEM.

STATE OF TEXAS
MAHMOUD SALEHI
89552
LICENSED
PROFESSIONAL ENGINEER
2/11/2022

No.	Date	Revisions	App.

THE STATE OF TEXAS
FORT BEND COUNTY

CobbFendley
TBPE Firm Registration No. 274
TBPLS Firm Registration No. 100467
22316 Grand Corner Drive, Suite 100
Katy, Texas 77494
713.462.3242 | fax 713.462.3262
www.cobbfendley.com

WEST BELLFORT ROAD
WESTBOUND LANES ONTO SH99

TYPICAL GROUND SIGN
INSTALLATION DETAILS

SUBMITTED:	DESIGNED BY:
SCALE: N/A	CC'D BY:
DATE: 2/11/2022	SHEET NO 35 OF 43 SHEETS
SURVEY: COBBFENDLEY	
CF JOB NO: 2111-002	

4:04:30 PM
2/11/2022
B:\Projects\2021\111002Ft+BendCounty+Engineering\03+West+Belfort+Street+WB+lanes+onto+SH99\400+CAD\411+Trans\11-Details\211100203+SIGNDET01.dgn

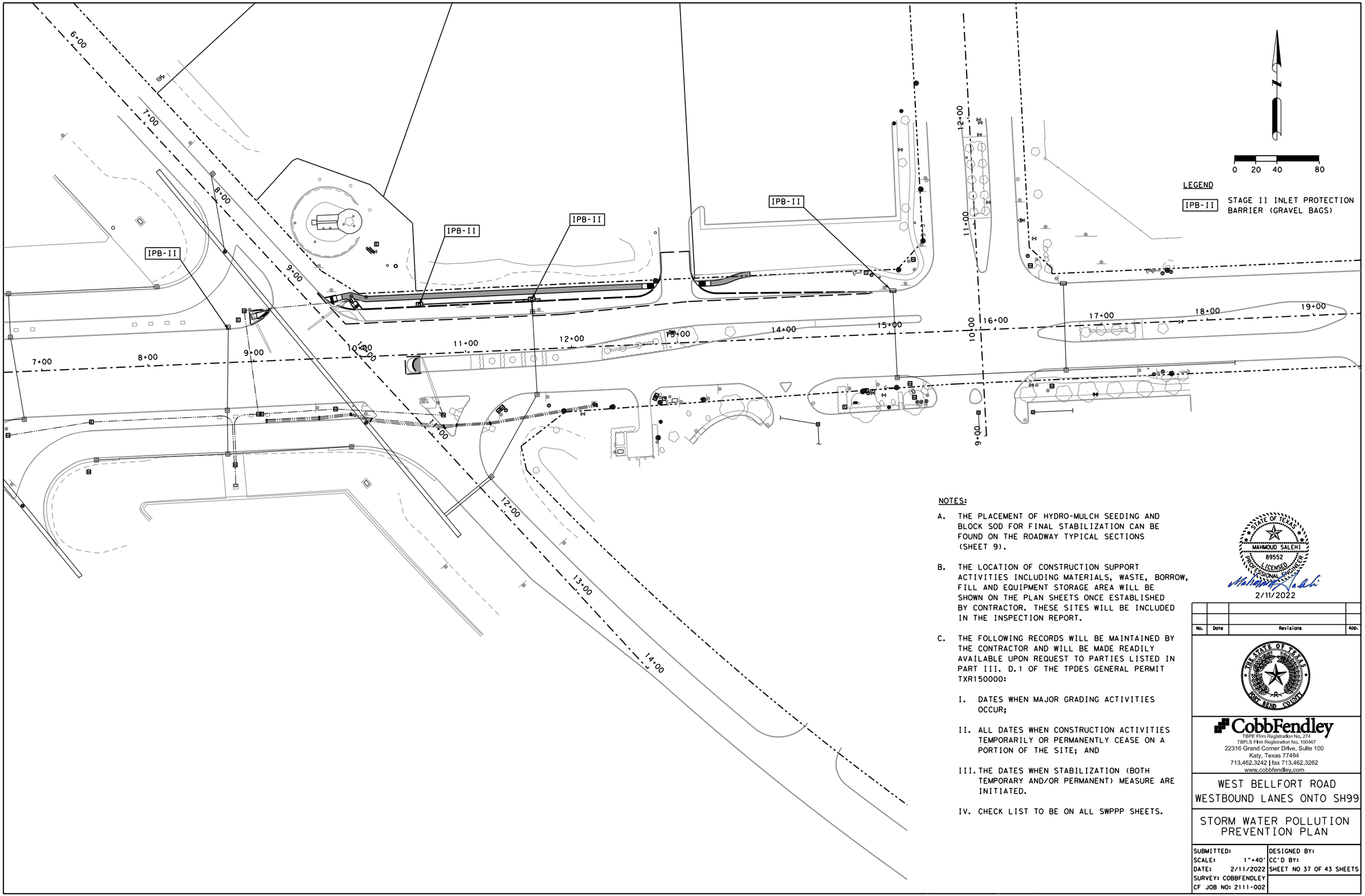

NOTES:

A. THE PLACEMENT OF HYDRO-MULCH SEEDING AND BLOCK SOD FOR FINAL STABILIZATION CAN BE FOUND ON THE ROADWAY TYPICAL SECTIONS (SHEET 9).

B. THE LOCATION OF CONSTRUCTION SUPPORT ACTIVITIES INCLUDING MATERIALS, WASTE, BORROW, FILL AND EQUIPMENT STORAGE AREA WILL BE SHOWN ON THE PLAN SHEETS ONCE ESTABLISHED BY CONTRACTOR. THESE SITES WILL BE INCLUDED IN THE INSPECTION REPORT.

C. THE FOLLOWING RECORDS WILL BE MAINTAINED BY THE CONTRACTOR AND WILL BE MADE READILY AVAILABLE UPON REQUEST TO PARTIES LISTED IN PART III. D.1 OF THE TPDES GENERAL PERMIT TXR150000:

I. DATES WHEN MAJOR GRADING ACTIVITIES OCCUR;

II. ALL DATES WHEN CONSTRUCTION ACTIVITIES TEMPORARILY OR PERMANENTLY CEASE ON A PORTION OF THE SITE; AND

III. THE DATES WHEN STABILIZATION (BOTH TEMPORARY AND/OR PERMANENT) MEASURE ARE INITIATED.

IV. CHECK LIST TO BE ON ALL SWPPP SHEETS.

STATE OF TEXAS
MAHMOUD SALEHI
89552
LICENSED
PROFESSIONAL ENGINEER
2/11/2022

No.	Date	Revisions	App.

THE STATE OF TEXAS
FORT BEND COUNTY

CobbFendley
TBPE Firm Registration No. 274
TBPLS Firm Registration No. 100467
22316 Grand Corner Drive, Suite 100
Katy, Texas 77494
713.462.3242 | fax 713.462.3262
www.cobbfendley.com

WEST BELLFORT ROAD
WESTBOUND LANES ONTO SH99

STORM WATER POLLUTION PREVENTION PLAN

SUBMITTED:	DESIGNED BY:
SCALE: 1"=40'	CC'D BY:
DATE: 2/11/2022	SHEET NO 37 OF 43 SHEETS
SURVEY: COBBFENDLEY	
CF JOB NO: 2111-002	

4:04:33 PM
2/11/2022
B:\Projects\2021\11002*Ft*BendCounty*Engineering\03*West*Belfort*Street*WB*lanes*onto*SH*99\400*CAD\411*Trans\10-SWPPP\20211100203*SWPPP01.dgn

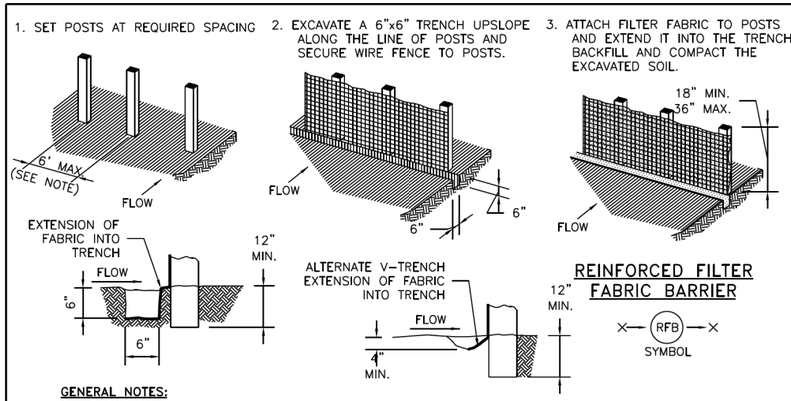

REINFORCED FILTER FABRIC BARRIER

RFB — SYMBOL

GENERAL NOTES:

1. SECURELY FASTEN MESH FENCING TO POSTS WITH STAPLES OR TIE WIRES.
2. SECURELY FASTEN FILTER FABRIC TO MESH FENCING.
3. WHEN TWO SECTIONS OF FILTER FABRIC ADJOIN EACH OTHER, OVERLAP 6 INCHES AT A POST, FOLD TOGETHER, AND ATTACH TO A POST.
4. REMOVE SEDIMENT DEPOSITS WHEN SILT REACHES ONE-THIRD OF THE HEIGHT OF THE FENCE IN DEPTH.
5. SILT FENCE MINIMUM 2' BEHIND CURB.

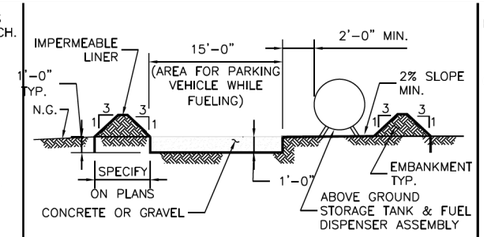

ABOVE GROUND TEMP. VEHICLE & EQUIPMENT FUELING AREA WITH TANK

TFA — SYMBOL

GENERAL NOTES:

1. THE SIZE OF TANK FOUNDATION AREA DEPENDS ON THE SIZE OF ABOVE GROUND STORAGE TANK AND DISPENSER ASSEMBLY.
2. PROVIDE A MINIMUM SLOPE OF 2 % TOWARD THE SUMP PIT.
3. INSTALL IMPERMEABLE LINER AS PER MANUFACTURER'S RECOMMENDATIONS.

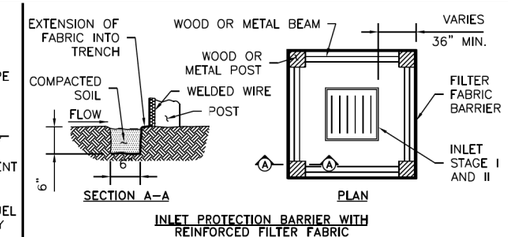

INLET PROTECTION BARRIER WITH REINFORCED FILTER FABRIC

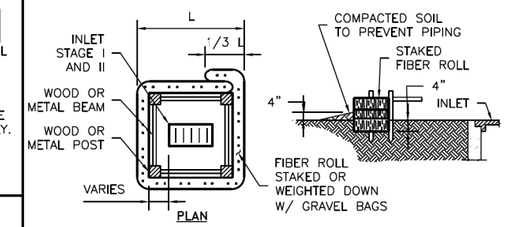

INLET PROTECTION BARRIER WITH FILTER ROLLS

GENERAL NOTES:

1. FIBER ROLLS WILL BE UTILIZED ONLY WHEN SITE CONDITIONS DO NOT PERMIT THE USE OF FILTER FABRIC BARRIER, AND AS APPROVED BY THE ENGINEER.

INLET PROTECTION BARRIERS FOR STAGE I INLETS

IPB — SYMBOL

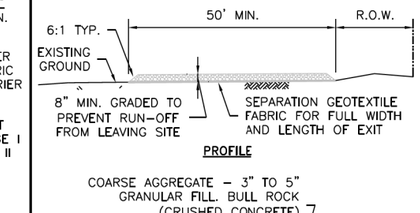

STABILIZED CONSTRUCTION ACCESS

SC-1 — SYMBOL

GENERAL NOTES:

1. MINIMUM LENGTH IS AS SHOWN ON CONSTRUCTION DRAWINGS OR 50 FEET, WHICHEVER IS MORE.
2. CONSTRUCT AND MAINTAIN CONSTRUCTION EXIT WITH CONSTANT WIDTH ACROSS ITS LENGTH, INCLUDING ALL POINTS OF INGRESS OR EGRESS.
3. UNLESS SHOWN ON THE CONSTRUCTION DRAWINGS, STABILIZATION FOR OTHER AREAS WILL HAVE THE SAME AGGREGATE THICKNESS AND WIDTH REQUIREMENTS AS THE STABILIZED CONSTRUCTION EXIT.
4. WHEN SHOWN ON THE CONSTRUCTION DRAWINGS, WIDEN OR LENGTHEN STABILIZED AREA TO ACCOMMODATE A TRUCK WASHING AREA. PROVIDE OUTLET SEDIMENT TRAP FOR THE TRUCK WASHING AREA.
5. PROVIDE PERIODIC TOP DRESSING WITH ADDITIONAL COARSE AGGREGATE TO MAINTAIN THE REQUIRED DEPTH OR WHEN SURFACE BECOMES PACKED WITH MUD.
6. PERIODICALLY TURN AGGREGATE TO EXPOSE A CLEAN DRIVING SURFACE.
7. MINIMUM 14' WIDTH FOR ONE WAY TRAFFIC AND 20' WIDTH FOR TWO WAY TRAFFIC.

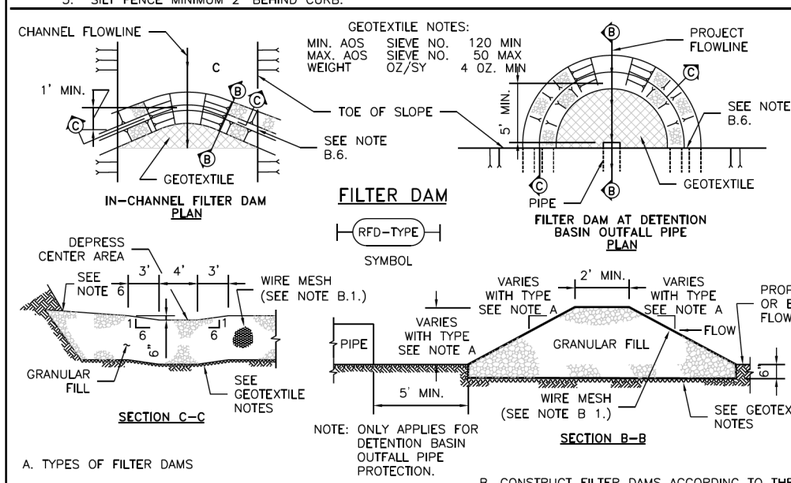

FILTER DAM

RFD-TYPE — SYMBOL

NOTE: ONLY APPLIES FOR DETENTION BASIN OUTFALL PIPE PROTECTION.

A. TYPES OF FILTER DAMS

1. TYPE 1 (NON-REINFORCED)
   a. HEIGHT - 18-24 INCHES. MEASURE VERTICALLY FROM EXISTING GROUND TO TOP OF FILTER DAM.
   b. TOP WIDTH - 2 FEET (MINIMUM)
   c. SLOPES - 2:1 (MAXIMUM).
2. TYPE 2 (REINFORCED).
   a. HEIGHT - 18-36 INCHES. MEASURE VERTICALLY FROM EXISTING GROUND TO TOP OF FILTER DAM.
   b. TOP WIDTH - 2 FEET (MINIMUM).
   c. SLOPES - 2:1 (MAXIMUM).
3. TYPE 3 (REINFORCED)
   a. HEIGHT - 36-48 INCHES. MEASURE VERTICALLY FROM EXISTING GROUND TO TOP OF FILTER DAM.
   b. TOP WIDTH - 2 FEET (MINIMUM).
   c. SLOPES - 3:1 (MAXIMUM).
4. TYPE 4 (GABION)
   a. HEIGHT - 30 INCHES (MINIMUM). MEASURE VERTICALLY FROM EXISTING GROUND TO TOP OF FILTER DAM.
   b. TOP WIDTH - 2 FEET (MINIMUM).
5. TYPE 5. AS SHOWN ON THE PLANS.

B. CONSTRUCT FILTER DAMS ACCORDING TO THE FOLLOWING CRITERIA UNLESS SHOWN OTHERWISE ON THE PLANS.

1. TYPE 2 AND 3 FILTER DAMS: SECURE WITH 20 GAUGE GALVANIZED WOVEN WIRE MESH WITH 1 INCH DIAMETER HEXAGONAL OPENINGS.
2. PLACE GRANULAR FILL ON THE WIRE MESH TO HEIGHT AND SLOPES SHOWN ON PLANS OR AS SPECIFIED BY THE ENGINEER.
   a. 3-5 INCHES FOR ROCK FILTER DAM TYPES 1, 2 AND 4.
   b. 4-8 INCHES FOR ROCK FILTER DAM TYPE REFER TO GRANULAR FILL IN SPECIFICATION SECTION No. 02378 RIPRAP AND GRANULAR FILL.
3. FOLD WIRE MESH AT UPSTREAM SIDE OVER GRANULAR FILL AND TIGHTLY SECURED TO ITSELF ON THE DOWNSTREAM SIDE USING WIRE TIES OR HOG RINGS.
4. IN STREAMS: SECURE OR STAKE MESH TO STREAM BED PRIOR TO AGGREGATE PLACEMENT.
5. SEE HCFCD SPECIFICATION SECTION NO. 02364-FILTER DAMS.
6. EMBED ONE FOOT MINIMUM INTO SLOPE AND RAISE ONE FOOT HIGHER THAN CENTER OF DEPRESSED AREA AT SLOPE.

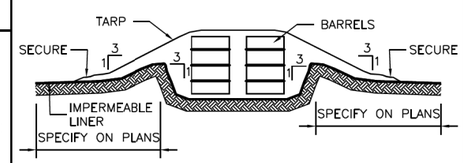

BARREL STORAGE AREA

BSA — SYMBOL

GENERAL NOTES:

1. ALTERNATIVELY, STORE BARRELS IN AN ENCLOSED BUILDING OR SHED.
2. INSTALL IMPERMEABLE LINER AS PER MANUFACTURER'S RECOMMENDATIONS. 60 mil MINIMUM.
3. CONSTRUCT BERMED AREA WITH VOLUME GREATER THAN OR EQUAL TO 110% VOLUME OF BARRELS.

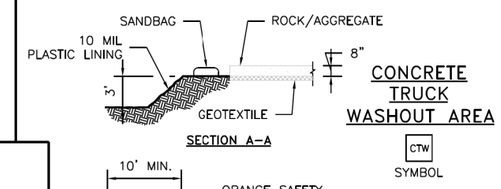

CONCRETE TRUCK WASHOUT AREA

CTW — SYMBOL

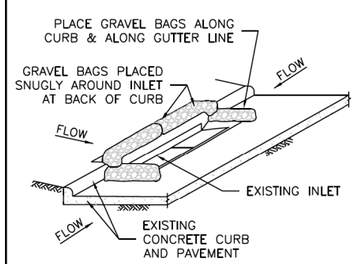

INLET PROTECTION BARRIERS FOR STAGE II INLETS

IPB-II — SYMBOL

GENERAL NOTES:

1. REMOVE SEDIMENT DEPOSIT WHEN THE SEDIMENT HAS ACCUMULATED TO ONE-THIRD THE HEIGHT OF THE BARRIER.
2. GRAVEL BAGS SHALL NOT BLOCK THROAT OF INLET UNLESS DIRECTED BY ENGINEER.

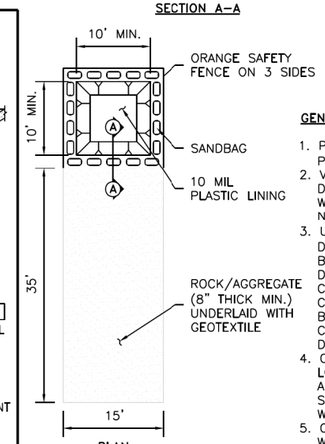

GENERAL NOTES:

1. POST A SIGN READING "CONCRETE WASHOUT PIT" NEXT TO THE PIT.
2. VERBALLY INSTRUCT THE CONCRETE TRUCK DRIVERS WHERE THE PIT IS AND TO WASHOUT THEIR TRUCKS IN THE PIT AND NOWHERE ELSE.
3. UPON THE CONCRETE SETTING UP (CURING, DRYING OUT), THE CONCRETE WASTE SHALL BE REMOVED FROM THE PROJECT SITE AND DISPOSED OF PROPERLY BY THE CONTRACTOR. AFTER REMOVAL OF THE CONCRETE WASTE, THE WASHOUT PIT SHALL BE FILLED WITH CLEAN FILL MATERIAL AND COMPACTED TO IN-SITU CONDITIONS, OR AS DIRECTED BY THE PROJECT SPECIFICATIONS.
4. CONCRETE WASHOUT PITS SHALL NOT BE LOCATED DIRECTLY ADJACENT TO, NOR AT ANY TIME DRAIN INTO THE STORM SEWER SYSTEM OR ANY OTHER SWALE, DITCH, OR WATERWAY.
5. CONSTRUCT ENTRY ROAD AND BOTTOM OF WASHOUT AREA TO SUPPORT EXPECTED LOADINGS FROM TRUCKS EQUIPMENT.

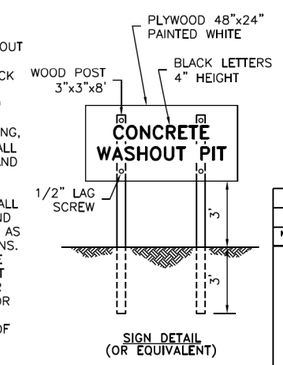

SIGN DETAIL (OR EQUIVALENT)

STATE OF TEXAS — MAHMOUD SALEHI — 89552 — LICENSED PROFESSIONAL ENGINEER

2/11/2022

No.	Date	Revisions	App.

THE STATE OF TEXAS — FORT BEND COUNTY

CobbFendley
TBPE Firm Registration No. 274
TBPLS Firm Registration No. 100467
22316 Grand Corner Drive, Suite 100
Katy, Texas 77494
713.462.3242 | fax 713.462.3262
www.cobbfendley.com

WEST BELLFORT ROAD
WESTBOUND LANES ONTO SH99

STORM WATER POLLUTION PREVENTION PLAN DETAILS

SUBMITTED:	DESIGNED BY:
SCALE: N/A	CC'D BY:
DATE: 2/11/2022	SHEET NO 38 OF 43 SHEETS
SURVEY: COBBFENDLEY	
CF JOB NO: 2111-002	

4:04:34 PM
2/11/2022
B:\Projects\2021\11002*Ft*Bend*County*Engineering\03*West*Belfort*Street*WB*Lanesonto*SH*99\400*CAD\411*Trans\11-Details\211100203*SWPPPDET01.dgn

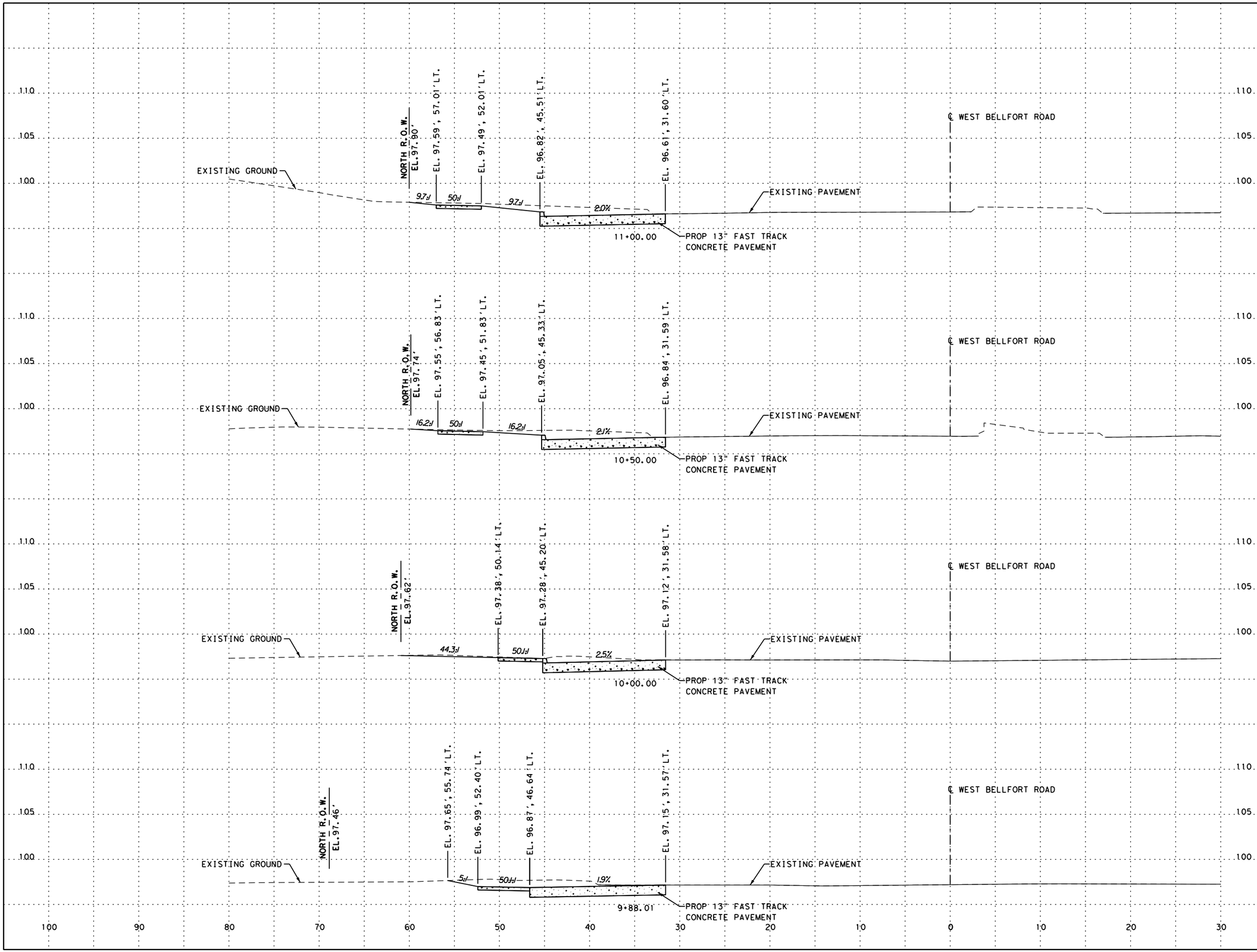

4:04:42 PM
2/11/2022
B:\Projects\2021\11002*Ft*Bend*County*Engineering\03*West*Belfort*Street*WB*lanes*onto*SH*99\400*CAD\411*Trans\01-Geopak\XSSHEET01.dgn

STATE OF TEXAS
MAHMOUD SALEHI
89552
LICENSED
PROFESSIONAL ENGINEER
2/11/2022

No.	Date	Revisions	App.

THE STATE OF TEXAS
FORT BEND COUNTY

CobbFendley
TBPE Firm Registration No. 274
TBPLS Firm Registration No. 100467
22316 Grand Corner Drive, Suite 100
Katy, Texas 77494
713.462.3242 | fax 713.462.3262
www.cobbfendley.com

WEST BELLFORT ROAD
WESTBOUND LANES ONTO SH99

CROSS SECTIONS
SHEET 1 OF 3

SUBMITTED:	DESIGNED BY:
SCALE: 1"=5'	CC'D BY:
DATE: 2/11/2022	SHEET NO 39 OF 43 SHEETS
SURVEY: COBBFENDLEY	
CF JOB NO: 2111-002	

STATE OF TEXAS
MAHMOUD SALEHI
89552
LICENSED
PROFESSIONAL ENGINEER
2/11/2022

No.	Date	Revisions	App.

THE STATE OF TEXAS
FORT BEND COUNTY

CobbFendley
TBPE Firm Registration No. 274
TBPLS Firm Registration No. 100467
22316 Grand Corner Drive, Suite 100
Katy, Texas 77494
713.462.3242 | fax 713.462.3262
www.cobbfendley.com

WEST BELLFORT ROAD
WESTBOUND LANES ONTO SH99

CROSS SECTIONS
SHEET 2 OF 3

SUBMITTED:	DESIGNED BY:
SCALE: 1"=5'	CC'D BY:
DATE: 2/11/2022	SHEET NO 40 OF 43 SHEETS
SURVEY: COBBFENDLEY	
CF JOB NO: 2111-002	

4:04:42 PM
2/11/2022
B:\Projects\2021\11002+F+Bend+County+Engineering\03+West+Bellfort+Street+WB+lanes+onto+SH99\400+CAD\411+Trans\01-Geopak\XSSHEET02.dgn

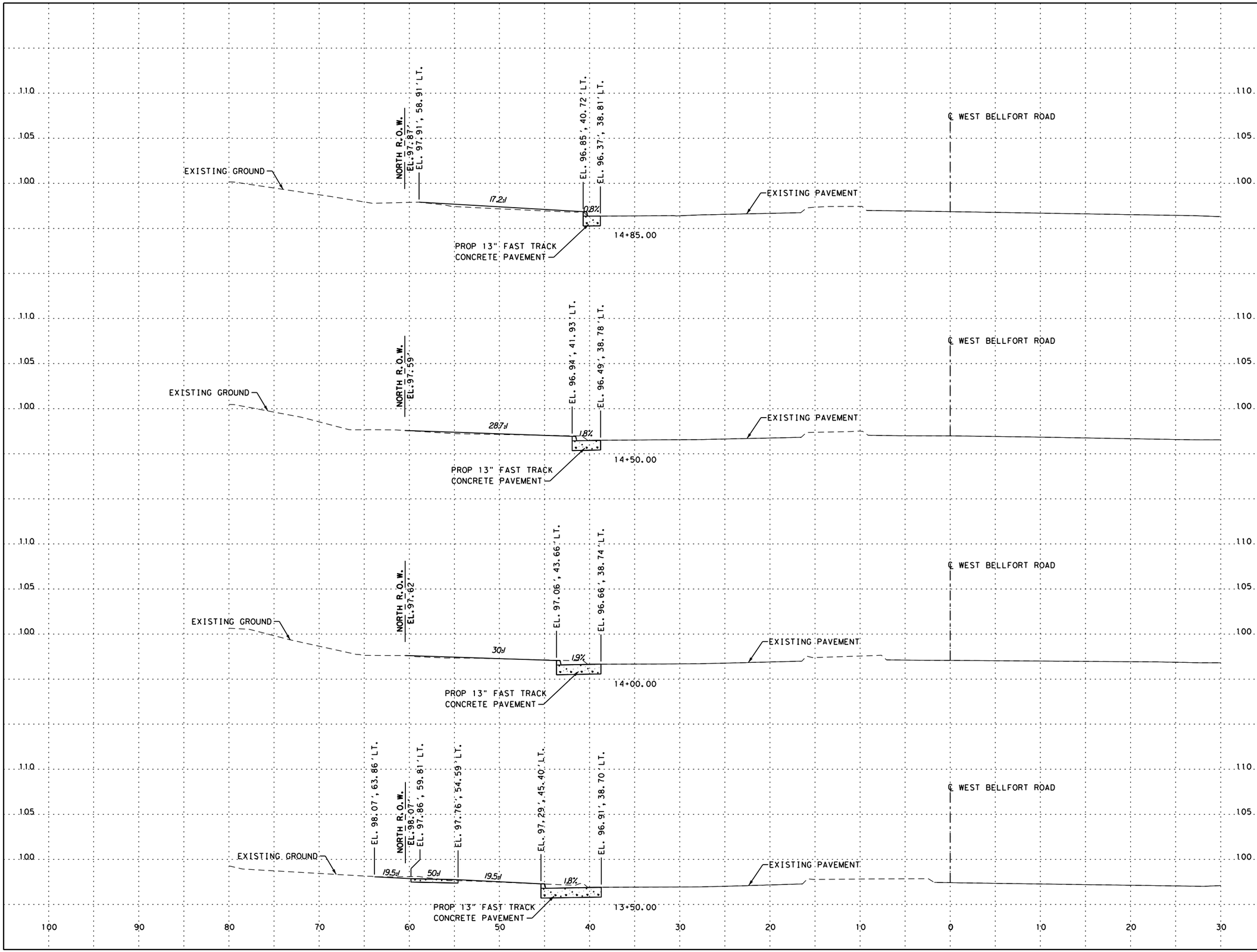

STATE OF TEXAS
MAHMOUD SALEHI
89552
LICENSED
PROFESSIONAL ENGINEER

2/11/2022

No.	Date	Revisions	App.

THE STATE OF TEXAS
FORT BEND COUNTY

CobbFendley
TBPE Firm Registration No. 274
TBPLS Firm Registration No. 100467
22316 Grand Corner Drive, Suite 100
Katy, Texas 77494
713.462.3242 | fax 713.462.3262
www.cobbfendley.com

WEST BELLFORT ROAD
WESTBOUND LANES ONTO SH99

CROSS SECTIONS
SHEET 3 OF 3

SUBMITTED:	DESIGNED BY:
SCALE: 1"=5'	CC'D BY:
DATE: 2/11/2022	SHEET NO 41 OF 43 SHEETS
SURVEY: COBBFENDLEY	
CF JOB NO: 2111-002	

4:04:43 PM
2/11/2022
B:\Projects\2021\11002-Ft+Bend+County+Engineering\03+West+Belfort+Street+WB+lanes+onto+SH+99\400+CAD\411+Trans\01-Geopak\XSSHEET03.dgn

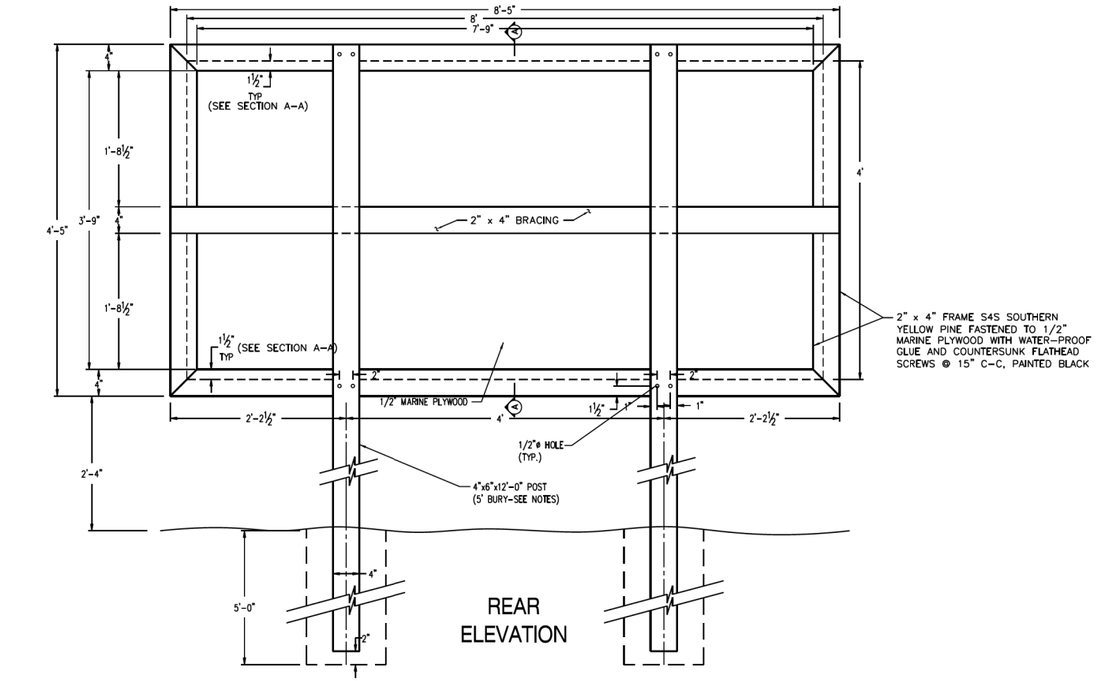

REAR ELEVATION

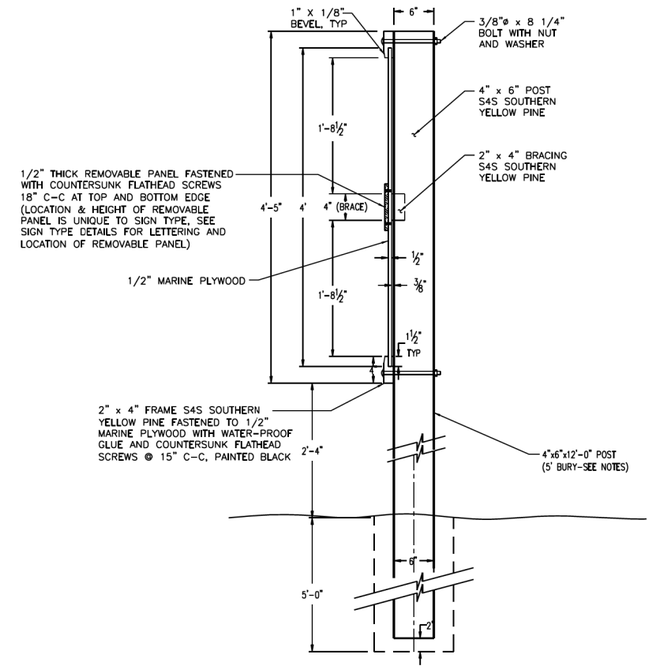

SECTION A-A

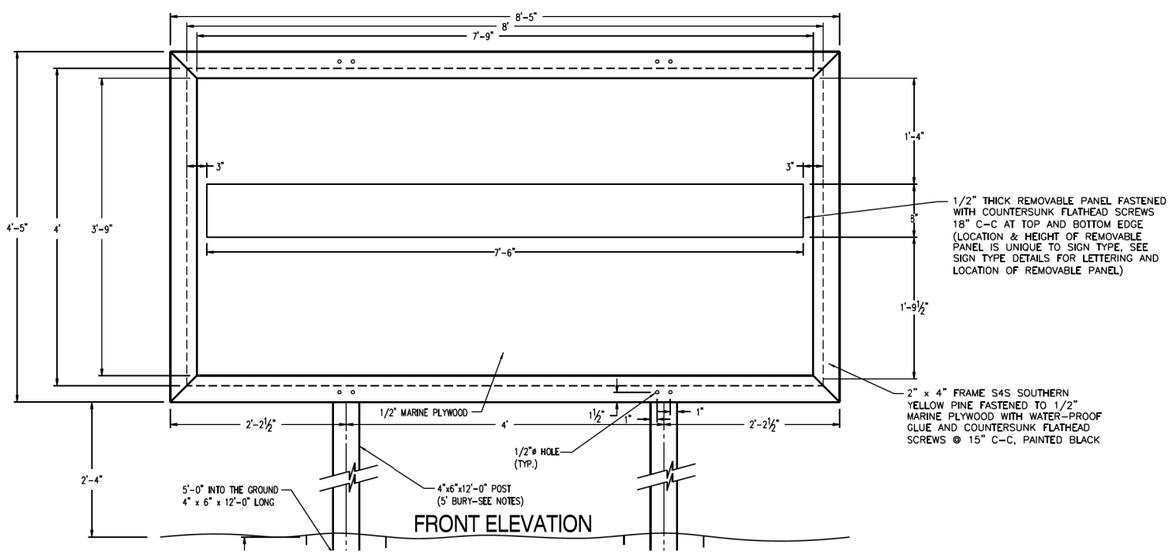

FRONT ELEVATION

GENERAL NOTES:

1. THE SIGN SHALL HAVE BLACK LETTERS WITH WHITE BACKGROUND.
2. ALL LETTERING SHALL BE EITHER AERIAL FONT OR HELVETICA FONT.
3. SIGN SHALL BE MOUNTED ON 4" x 6" POSTS AND LOCATED BY THE ENGINEER.
4. REMOVABLE PANEL SHALL BE 1/2" MARINE PLYWOOD.
5. ALL BOLTS, SCREWS, NAILS, NUTS AND WASHERS SHALL BE GALVANIZED OR CADMIUM PLATED.
6. 4" x 6" POST SHALL BE WOLMANIZED OR PENTACHLOROPHENOL TREATED.
7. ALL WOOD SURFACES SHALL HAVE PRIME COAT AND TWO (2) COATS OF SHERWIN-WILLIAMS KEM-LUSTRA ENAMEL OR EQUAL.

STATE OF TEXAS
MAHMOUD SALEHI
89552
LICENSED
PROFESSIONAL ENGINEER

2/11/2022

No.	Date	Revisions	App.

THE STATE OF TEXAS
FORT BEND COUNTY

CobbFendley
TBPE Firm Registration No. 274
TBPLS Firm Registration No. 100467
22316 Grand Corner Drive, Suite 100
Katy, Texas 77494
713.462.3242 | fax 713.462.3262
www.cobbfendley.com

WEST BELLFORT ROAD
WESTBOUND LANES ONTO SH99

PROJECT SIGN DETAILS
SHEET 1 OF 2

SUBMITTED:	DESIGNED BY:
SCALE: N/A	CC'D BY:
DATE: 2/11/2022	SHEET NO 42 OF 43 SHEETS
SURVEY: COBBFENDLEY	
CF JOB NO: 2111-002	

4:04:43 PM
2/11/2022
B:\Projects\2021\11002*Ft*Bend*County*Engineering\03*West*Bellfort*Street*WB*lanes*onto*SH*99\400*CAD\41*Trans\11-Details\211100203*PROSIGNDET01.dgn

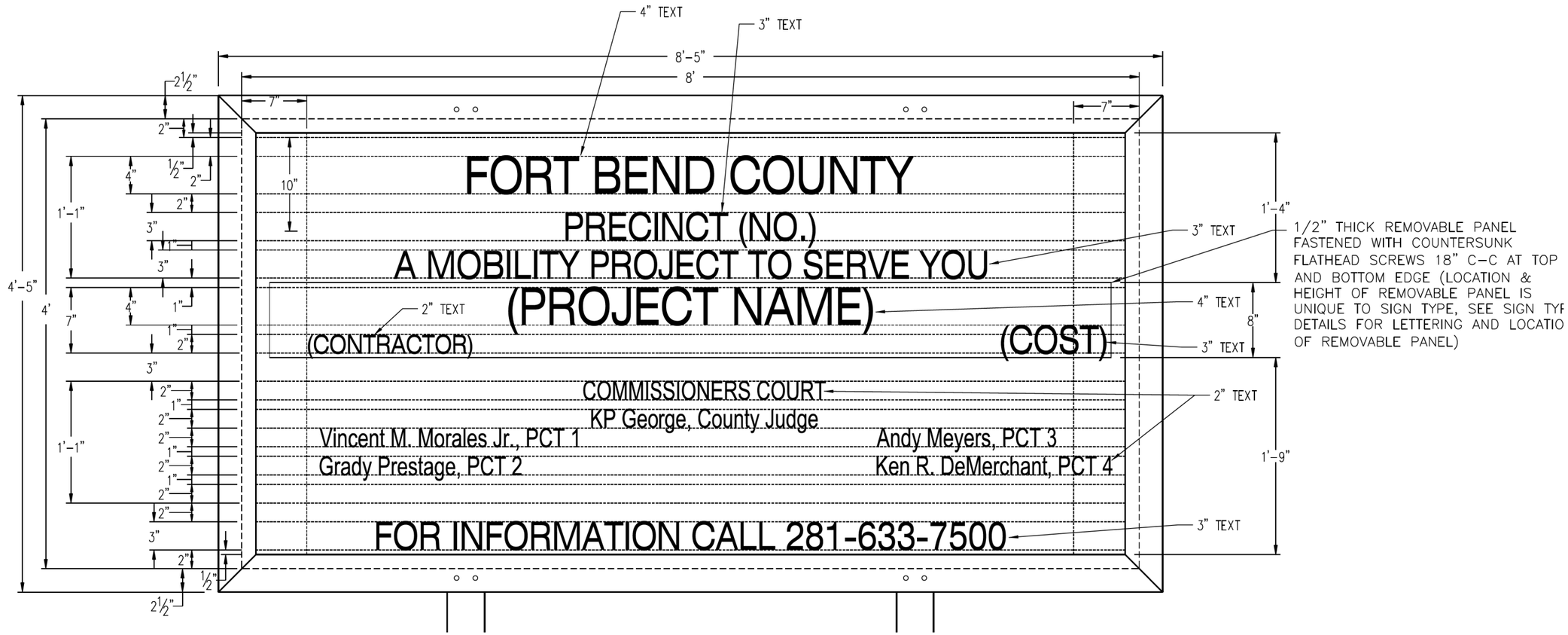

STATE OF TEXAS
MAHMOUD SALEHI
89552
LICENSED
PROFESSIONAL ENGINEER

2/11/2022

No.	Date	Revisions	App.

THE STATE OF TEXAS
FORT BEND COUNTY

CobbFendley
TBPE Firm Registration No. 274
TBPLS Firm Registration No. 100467
22316 Grand Corner Drive, Suite 100
Katy, Texas 77494
713.462.3242 | fax 713.462.3262
www.cobbfendley.com

WEST BELLFORT ROAD
WESTBOUND LANES ONTO SH99

PROJECT SIGN DETAILS
SHEET 2 OF 2

SUBMITTED:	DESIGNED BY:
SCALE: N/A	CC'D BY:
DATE: 2/11/2022	SHEET NO 43 OF 43 SHEETS
SURVEY: COBBFENDLEY	
CF JOB NO: 2111-002	

4:04:46 PM
2/11/2022
B:\Projects\2021\11002Ft+BendCounty*Engineering\03*West+Belfort+Street+WB+lanes*onto*SH*99\400*CAD\411*Trans\11-Details\211100203*PROSIGNDET02.dgn